NOTICE

AT THE TIME OF ISSUANCE, THIS INFORMATION MANUAL WAS AN EXACT DUPLICATE OF THE OFFICIAL PILOT'S OPERATING HANDBOOK AND FAA APPROVED AIRPLANE FLIGHT MANUAL AND IS TO BE USED FOR GENERAL PURPOSES ONLY.

IT WILL NOT BE KEPT CURRENT AND, THEREFORE, CANNOT BE USED AS A SUBSTITUTE FOR THE OFFICIAL PILOT'S OPERATING HANDBOOK AND FAA APPROVED AIRPLANE FLIGHT MANUAL INTENDED FOR OPERATION OF THE AIRPLANE.

THE PILOT'S OPERATING HANDBOOK MUST BE CARRIED IN THE AIRPLANE AND AVAILABLE TO THE PILOT AT ALL TIMES.

Cessna Aircraft Company
Original Issue - 25 February 2005
Revision 3 - 12 October 2006

PERFORMANCE - SPECIFICATIONS

*SPEED:
Maximum at Sea Level . . . . . 126 KNOTS
Cruise, 75% Power at 8500 Feet. . . . . 124 KNOTS

CRUISE: Recommended lean mixture with fuel allowance for engine start, taxi, takeoff, climb and 45 minutes reserve.

75% Power at 8500 Feet . . . . . Range - 518 NM
53 Gallons Usable Fuel . . . . . Time - 4.26 HOURS
Range at 10,000 Feet, 45% Power. . . . . Range - 638 NM
53 Gallons Usable Fuel . . . . . Time - 6.72 HOURS

RATE-OF-CLIMB AT SEA LEVEL . . . . . 730 FPM

SERVICE CEILING . . . . . 14,000 FEET

TAKEOFF PERFORMANCE:
Ground Roll . . . . . 960 FEET
Total Distance Over 50 Foot Obstacle . . . . . 1630 FEET

LANDING PERFORMANCE:
Ground Roll . . . . . 575 FEET
Total Distance Over 50 Foot Obstacle . . . . . 1335 FEET

STALL SPEED:
Flaps Up, Power Off . . . . . 53 KCAS
Flaps Down, Power Off . . . . . 48 KCAS

MAXIMUM WEIGHT:
Ramp . . . . . 2558 POUNDS
Takeoff . . . . . 2550 POUNDS
Landing . . . . . 2550 POUNDS

(Continued Next Page)

PERFORMANCE - SPECIFICATIONS (Continued)

STANDARD EMPTY WEIGHT. . . . . 1663 POUNDS

MAXIMUM USEFUL LOAD . . . . . 895 POUNDS

BAGGAGE ALLOWANCE . . . . . 120 POUNDS

WING LOADING: Lbs/Sq. Ft. 14.7

POWER LOADING: Lbs/HP 14.2

FUEL CAPACITY . . . . . 56 GALLONS

OIL CAPACITY . . . . . 8 QUARTS

ENGINE: Textron Lycoming IO-360-L2A
180 BHP at 2700 RPM

PROPELLER:
Fixed Pitch, Diameter . . . . . 76 INCHES

NOTE

*Speed performance is shown for an airplane equipped with speed fairings which increase the speeds by approximately 2 knots. There is a corresponding difference in range, while all other performance figures are unchanged when speed fairings are installed.

The above performance figures are based on airplane weights at 2550 pounds, standard atmospheric conditions, level, hard-surfaced dry runways and no wind. They are calculated values derived from flight tests conducted by Cessna Aircraft Company under carefully documented conditions and will vary with individual airplanes and numerous factors affecting flight performance.

Cessna
A Textron Company

Information Manual

SKYHAWK SP

Member of GAMA

Cessna Aircraft Company

Model 172S
NAV III AVIONICS OPTION
Serials 172S9810 and On

THIS MANUAL INCORPORATES INFORMATION ISSUED IN THE PILOT'S OPERATING HANDBOOK AND FAA APPROVED AIRPLANE FLIGHT MANUAL AT REVISION 4 DATED 12 OCTOBER 2006 (PART NUMBER 172SPHAUS-04).

COPYRIGHT © 2005
CESSNA AIRCRAFT COMPANY
WICHITA, KANSAS USA

172SIMAUS-03

TABLE OF CONTENTS

SECTION

GENERAL 1

LIMITATIONS 2

EMERGENCY PROCEDURES 3

NORMAL PROCEDURES 4

PERFORMANCE 5

WEIGHT AND BALANCE/EQUIPMENT LIST 6

AIRPLANE AND SYSTEMS DESCRIPTION 7

HANDLING, SERVICE AND MAINTENANCE 8

SUPPLEMENTS 9

GENERAL

TABLE OF CONTENTS

Page

Three View - Normal Ground Attitude 1-3
Introduction 1-5
Descriptive Data 1-5
Engine 1-5
Propeller 1-5
Fuel 1-5
Oil 1-6
Maximum Certificated Weights 1-7
Standard Airplane Weights 1-8
Cabin And Entry Dimensions 1-8
Baggage Space And Entry Dimensions 1-8
Specific Loadings 1-8
Symbols, Abbreviations and Terminology 1-9
General Airspeed Terminology And Symbols 1-9
Meteorological Terminology 1-10
Engine Power Terminology 1-10
Airplane Performance And Flight Planning Terminology . . 1-11
Weight And Balance Terminology 1-12
Metric / Imperial / U.S. Conversion Charts 1-14
Weight Conversions 1-15
Length Conversions 1-17
Distance Conversions 1-21
Volume Conversions 1-22
Temperature Conversions 1-25
Hectopascals to Inches Mercury 1-26
Volume to Weight Conversions 1-27
Quick Conversions 1-28

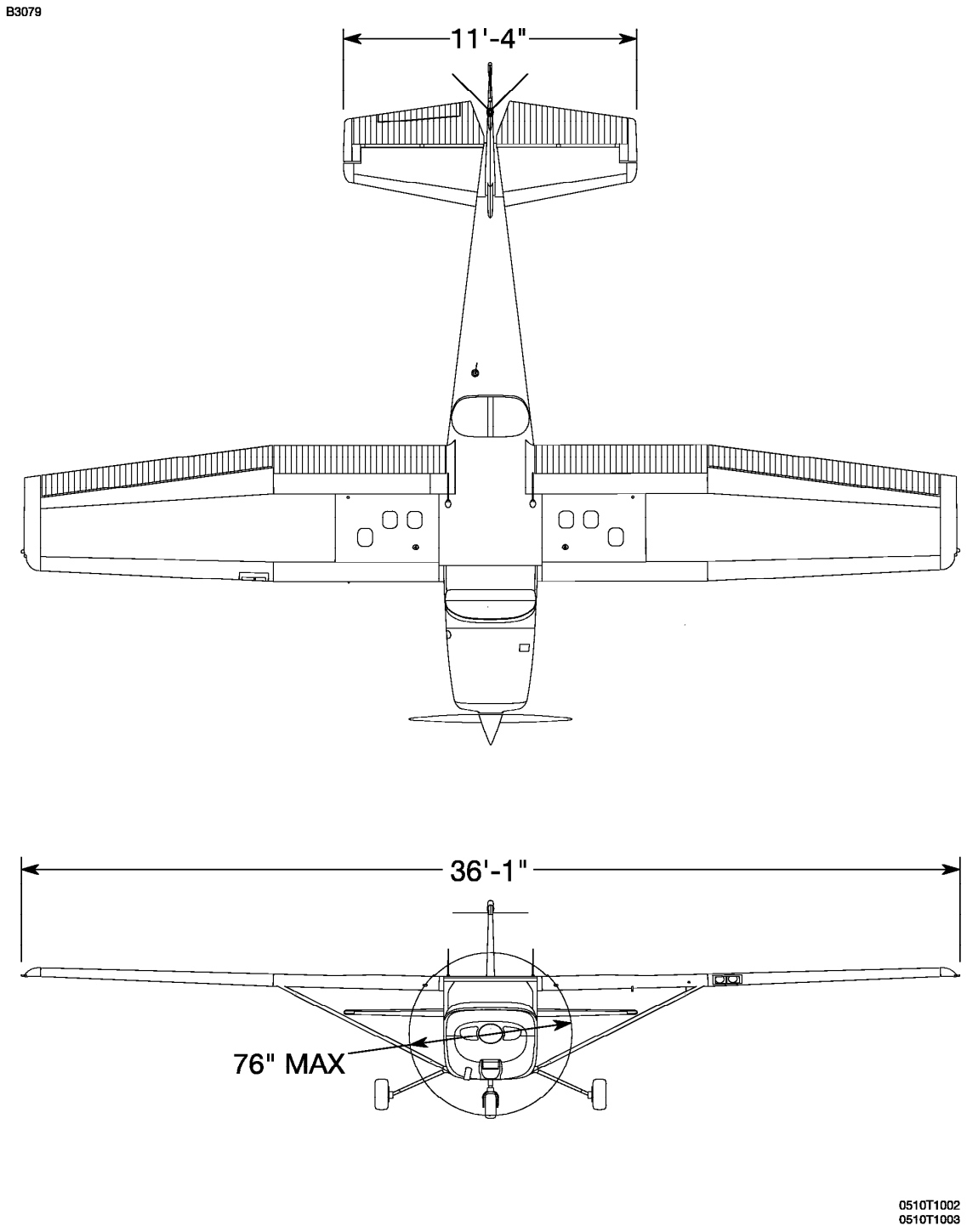

Figure 1-1. Three View - Normal Ground Attitude (Sheet 1 of 2)

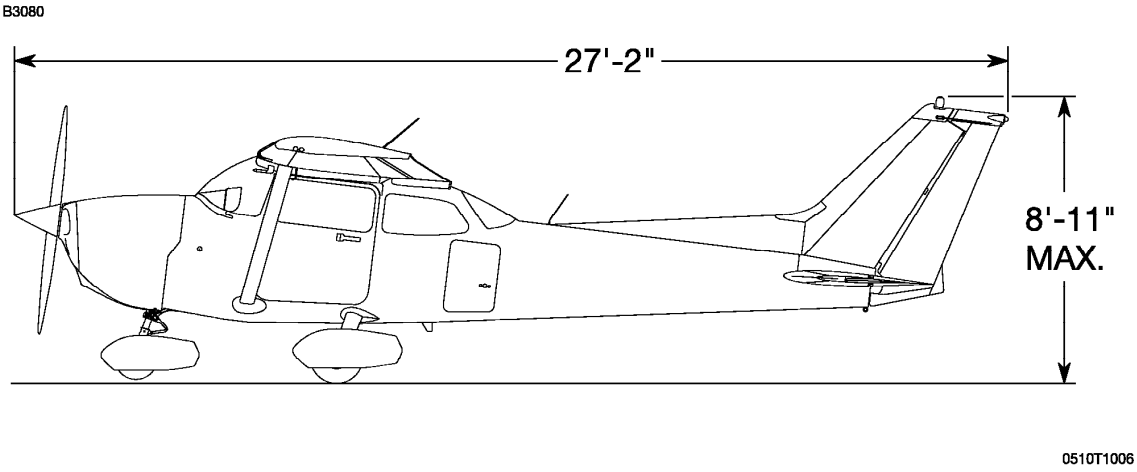

NOTE

- Wing span is shown with strobe lights installed.
- Wheel base length is 65”.
- Propeller ground clearance is 11 1/4”.
- Wing area is 174 square feet.
- Minimum turning radius (* pivot point to outboard wing tip) is 27’-5 1/2”.
- Normal ground attitude is shown with nose strut showing approximately 2” of strut, and wings level.

Figure 1-1. Three View - Normal Ground Attitude (Sheet 2)

INTRODUCTION

This handbook contains 9 sections, and includes the material required to be furnished to the pilot by FAR Part 23. It also contains supplemental data supplied by Cessna Aircraft Company.

Section 1 provides basic data and information of general interest. It also contains definitions or explanations of symbols, abbreviations, and terminology commonly used.

DESCRIPTIVE DATA

ENGINE

Number of Engines: 1.
Engine Manufacturer: Textron Lycoming.
Engine Model Number: IO-360-L2A.
Engine Type: Normally aspirated, direct drive, air-cooled, horizontally opposed, fuel injected, four cylinder engine with 360 cu. in. displacement.
Horsepower Rating and Engine Speed: 180 rated BHP at 2700 RPM.

PROPELLER

Propeller Manufacturer: McCauley Propeller Systems.
Propeller Model Number: 1A170E/JHA7660.
Number of Blades: 2.
Propeller Diameter: 76 inches.
Propeller Type: Fixed pitch.

FUEL

WARNING

USE OF UNAPPROVED FUELS MAY RESULT IN DAMAGE TO THE ENGINE AND FUEL SYSTEM COMPONENTS, RESULTING IN POSSIBLE ENGINE FAILURE.

Approved Fuel Grades (and Colors):
100LL Grade Aviation Fuel (Blue).
100 Grade Aviation Fuel (Green).

(Continued Next Page)

FUEL (Continued)

NOTE

Isopropyl alcohol or diethylene glycol monomethyl ether (DiEGME) may be added to the fuel supply. Additive concentrations shall not exceed 1% for isopropyl alcohol or 0.10% to 0.15% for DiEGME. Refer to Section 8 for additional information.

Fuel Capacity:

Total Capacity:	56.0 U.S. gallons.
Total Usable:	53.0 U.S. gallons.

Total Capacity Each Tank:	28.0 U.S. gallons.
Total Usable Each Tank:	26.5 U.S. gallons.

NOTE

To ensure maximum fuel capacity and minimize cross-feeding when refueling, always park the airplane in a wings-level, normal ground attitude and place the fuel selector in the Left or Right position. Refer to Figure 1-1 for normal ground attitude dimensions.

OIL

Oil Specification:

MIL-L-6082 or SAE J1966 Aviation Grade Straight Mineral Oil: Used when the airplane was delivered from the factory and should be used to replenish the supply during the first 25 hours. This oil should be drained and the filter changed after the first 25 hours of operation. Refill the engine with MIL-L-6082 or SAE J1966 Aviation Grade Straight Mineral Oil and continue to use until a total of 50 hours has accumulated or oil consumption has stabilized.

MIL-L-22851 or SAE J1899 Aviation Grade Ashless Dispersant Oil: Oil conforming to the latest revision and/or supplements to Textron Lycoming Service Instruction No. 1014, **must be used** after first 50 hours or once oil consumption has stabilized.

(Continued Next Page)

OIL (Continued)

Recommended Viscosity for Temperature Range:

Temperature	MIL-L-6082 or SAE J1966 Straight Mineral Oil SAE Grade	MIL-L-22851 or SAE J1899 Ashless Dispersant SAE Grade
Above 27°C (80°F)	60	15W-50, 20W-50 or 60
Above 16°C (60°F)	50	40 or 50
-1°C (30°F) to 32°C (90°F)	40	40
-18°C (0°F) to 21°C (70°F)	30	30, 40 or 20W-40
Below -12°C (10°F)	20	30 or 20W-30
-18°C (0°F) to 32°C (90°F)	20W-50	20W-50 or 15W-50
All Temperatures	---	15W-50 or 20W-50

NOTE

When operating temperatures overlap, use the lighter grade of oil.

Oil Capacity:
Sump: 8 U.S. Quarts
Total: 9 U.S. Quarts

MAXIMUM CERTIFICATED WEIGHTS

Ramp Weight	Normal Category:	2558 lbs.
	Utility Category:	2208 lbs.
Takeoff Weight	Normal Category:	2550 lbs.
	Utility Category:	2200 lbs.
Landing Weight	Normal Category:	2550 lbs.
	Utility Category:	2200 lbs.

(Continued Next Page)

MAXIMUM CERTIFICATED WEIGHTS (Continued)

Weight in Baggage Compartment, Normal Category:

Baggage Area 1 (Station 82 to 108): 120 lbs. See note below.
Baggage Area 2 (Station 108 to 142): 50 lbs. See note below.

NOTE

The maximum combined weight capacity for Baggage Area 1 and Baggage Area 2 is 120 lbs.

Weight in Baggage Compartment, Utility Category:

In this category, the rear seat must not be occupied and the baggage compartment must be empty.

STANDARD AIRPLANE WEIGHTS

Standard Empty Weight:	1663 lbs.
Maximum Useful Load, Normal Category	895 lbs.
Maximum Useful Load, Utility Category:	545 lbs.

CABIN AND ENTRY DIMENSIONS

Detailed dimensions of the cabin interior and entry door openings are illustrated in Section 6.

BAGGAGE SPACE AND ENTRY DIMENSIONS

Dimensions of the baggage area and baggage door opening are illustrated in detail in Section 6.

SPECIFIC LOADINGS

Wing Loading:	14.7 lbs./sq. ft.
Power Loading:	14.2 lbs./hp.

SYMBOLS, ABBREVIATIONS AND TERMINOLOGY

GENERAL AIRSPEED TERMINOLOGY AND SYMBOLS

KCAS — **Knots Calibrated Airspeed** is indicated airspeed corrected for position and instrument error and expressed in knots. Knots calibrated airspeed is equal to KTAS in standard atmosphere at sea level.

KIAS — **Knots Indicated Airspeed** is the speed shown on the airspeed indicator and expressed in knots.

KTAS — **Knots True Airspeed** is the airspeed expressed in knots relative to undisturbed air which is KCAS corrected for altitude and temperature.

V_A — **Maneuvering Speed** is the maximum speed at which full or abrupt control movements may be used without overstressing the airframe.

V_{FE} — **Maximum Flap Extended Speed** is the highest speed permissible with wing flaps in a prescribed extended position.

V_{NO} — **Maximum Structural Cruising Speed** is the speed that should not be exceeded except in smooth air, then only with caution.

V_{NE} — **Never Exceed Speed** is the speed limit that may not be exceeded at any time.

V_S — **Stalling Speed or the minimum steady flight speed** is the minimum speed at which the airplane is controllable.

V_{SO} — **Stalling Speed or the minimum steady flight speed** is the minimum speed at which the airplane is controllable in the landing configuration at the most forward center of gravity.

V_X — **Best Angle-of-Climb Speed** is the speed which results in the greatest gain of altitude in a given horizontal distance.

V_Y — **Best Rate-of-Climb Speed** is the speed which results in the greatest gain in altitude in a given time.

METEOROLOGICAL TERMINOLOGY

OAT	**Outside Air Temperature** is the free air static temperature. It may be expressed in either degrees Celsius or degrees Fahrenheit.
Standard Temperature	**Standard Temperature** is 15°C at sea level pressure altitude and decreases by 2°C for each 1000 feet of altitude.
Pressure Altitude	**Pressure Altitude** is the altitude read from an altimeter when the altimeter's barometric scale has been set to 29.92 inches of mercury (1013 mb).

ENGINE POWER TERMINOLOGY

BHP	**Brake Horsepower** is the power developed by the engine.
RPM	**Revolutions Per Minute** is engine speed.
Static RPM	**Static RPM** is engine speed attained during a full throttle engine runup when the airplane is on the ground and stationary.
MAP	**Manifold Absolute Pressure** is the absolute pressure measured in the engine induction system. MAP is measured in units of inches of mercury (inHG).
Lean Mixture	Decreased proportion of fuel in the fuel-air mixture supplied to the engine. As air density decreases, the amount of fuel required by the engine decreases for a given throttle setting. Adjusting the fuel-air mixture to provide a smaller portion of fuel is known as "leaning" the mixture.
Rich Mixture	Increased proportion of fuel in the fuel-air mixture supplied to the engine. As air density increases, the amount of fuel required by the engine increases for a given throttle setting. Adjusting the fuel-air mixture to provide a greater portion of fuel is known as "richening" the mixture.

(Continued Next Page)

ENGINE POWER TERMINOLOGY (Continued)

Full Rich	Mixture control full forward (pushed in, full control travel, toward the panel).
Idle Cutoff	Mixture control full aft (pulled out, full control travel, away from the panel).
Full Throttle	Throttle full forward (pushed in, full control travel, toward the panel) Also known as "full open" throttle.
Closed Throttle	Throttle full aft (pulled out, full control travel, away from the panel). Also known as the throttle "idle" position.

AIRPLANE PERFORMANCE AND FLIGHT PLANNING TERMINOLOGY

Demon-strated Crosswind Velocity	**Demonstrated Crosswind Velocity** is the velocity of the crosswind component for which adequate control of the airplane during takeoff and landing was actually demonstrated during certification tests. The value shown is not considered to be limiting.
Usable Fuel	**Usable Fuel** is the fuel available for flight planning.
Unusable Fuel	**Unusable Fuel** is the quantity of fuel that can not be safely used in flight.
GPH	**Gallons Per Hour** is the amount of fuel consumed per hour.
NMPG	**Nautical Miles Per Gallon** is the distance which can be expected per gallon of fuel consumed at a specific engine power setting and/or flight configuration.
g	**g** is acceleration due to gravity.
Course Datum	**Course Datum** is the compass reference used by the autopilot, along with course deviation, to provide lateral control when tracking a navigation signal.

WEIGHT AND BALANCE TERMINOLOGY

Reference Datum	**Reference Datum** is an imaginary vertical plane from which all horizontal distances are measured for balance purposes.
Station	**Station** is a location along the airplane fuselage given in terms of the distance from the reference datum.
Arm	**Arm** is the horizontal distance from the reference datum to the center of gravity (C.G.) of an item.
Moment	**Moment** is the product of the weight of an item multiplied by its arm. (Moment divided by the constant 1000 is used in this handbook to simplify balance calculations by reducing the number of digits.)
Center of Gravity (C.G.)	**Center of Gravity** is the point at which an airplane, or equipment, would balance if suspended. Its distance from the reference datum is found by dividing the total moment by the total weight of the airplane.
C.G. Arm	**Center of Gravity Arm** is the arm obtained by adding the airplane's individual moments and dividing the sum by the total weight.
C.G. Limits	**Center of Gravity Limits** are the extreme center of gravity locations within which the airplane must be operated at a given weight.
Standard Empty Weight	**Standard Empty Weight** is the weight of a standard airplane, including unusable fuel, full operating fluids and full engine oil.
Basic Empty Weight	**Basic Empty Weight** is the standard empty weight plus the weight of optional equipment.
Useful Load	**Useful Load** is the difference between ramp weight and the basic empty weight.

(Continued Next Page)

WEIGHT AND BALANCE TERMINOLOGY (Continued)

MAC	**MAC (Mean Aerodynamic Chord)** is the chord of an imaginary rectangular airfoil having the same pitching moments throughout the flight range as that of the actual wing.
Maximum Ramp Weight	**Maximum Ramp Weight** is the maximum weight approved for ground maneuver, and includes the weight of fuel used for start, taxi and runup.
Maximum Takeoff Weight	**Maximum Takeoff Weight** is the maximum weight approved for the start of the takeoff roll.
Maximum Landing Weight	**Maximum Landing Weight** is the maximum weight approved for the landing touchdown.
Tare	**Tare** is the weight of chocks, blocks, stands, etc. used when weighing an airplane, and is included in the scale readings. Tare is deducted from the scale reading to obtain the actual (net) airplane weight.

METRIC / IMPERIAL / U.S. CONVERSION CHARTS

The following charts have been provided to help international operators convert U.S. measurement supplied with the Pilot's Operating Handbook into metric and imperial measurements.

The standard followed for measurement units shown, is the National Institute of Standards Technology (NIST), Publication 811, "Guide for the Use of the International System of Units (SI)."

Refer to the following pages for these charts.

(Kilograms × 2.205 = Pounds) (Pounds × .454 = Kilograms)

KILOGRAMS INTO POUNDS
KILOGRAMMES EN LIVRES

kg	0	1	2	3	4	5	6	7	8	9
	lb.	lb.	lb.	lb.	lb.	lb.	lb.	lb.	lb.	lb.
0		2.205	4.409	6.614	8.819	11.023	13.228	15.432	17.637	19.842
10	22.046	24.251	26.456	28.660	30.865	33.069	35.274	37.479	39.683	41.888
20	44.093	46.297	48.502	50.706	52.911	55.116	57.320	59.525	61.729	63.934
30	66.139	68.343	70.548	72.753	74.957	77.162	79.366	81.571	83.776	85.980
40	88.185	90.390	92.594	94.799	97.003	99.208	101.41	103.62	105.82	108.03
50	110.23	112.44	114.64	116.85	119.05	121.25	123.46	125.66	127.87	130.07
60	132.28	134.48	136.69	138.89	141.10	143.30	145.51	147.71	149.91	152.12
70	154.32	156.53	158.73	160.94	163.14	165.35	167.55	169.76	171.96	174.17
80	176.37	178.57	180.78	182.98	185.19	187.39	189.60	191.80	194.01	196.21
90	198.42	200.62	202.83	205.03	207.24	209.44	211.64	213.85	216.05	218.26
100	220.46	222.67	224.87	227.08	229.28	231.49	233.69	235.90	238.10	240.30

POUNDS INTO KILOGRAMS
LIVRES EN KILOGRAMMES

lb.	0	1	2	3	4	5	6	7	8	9
	kg	kg	kg	kg	kg	kg	kg	kg	kg	kg
0		0.454	0.907	1.361	1.814	2.268	2.722	3.175	3.629	4.082
10	4.536	4.990	5.443	5.897	6.350	6.804	7.257	7.711	8.165	8.618
20	9.072	9.525	9.979	10.433	10.886	11.340	11.793	12.247	12.701	13.154
30	13.608	14.061	14.515	14.969	15.422	15.876	16.329	16.783	17.237	17.690
40	18.144	18.597	19.051	19.504	19.958	20.412	20.865	21.319	21.772	22.226
50	22.680	23.133	23.587	24.040	24.494	24.948	25.401	25.855	26.303	26.762
60	27.216	27.669	28.123	28.576	29.030	29.484	29.937	30.391	30.844	31.298
70	31.752	32.205	32.659	33.112	33.566	34.019	34.473	34.927	35.380	35.834
80	36.287	36.741	37.195	37.648	38.102	38.555	39.009	39.463	39.916	40.370
90	40.823	41.277	41.731	42.184	42.638	43.091	43.545	43.999	44.452	44.906
100	45.359	45.813	46.266	46.720	47.174	47.627	48.081	48.534	48.988	49.442

Figure 1-2. Weight Conversions (Sheet 1 of 2)

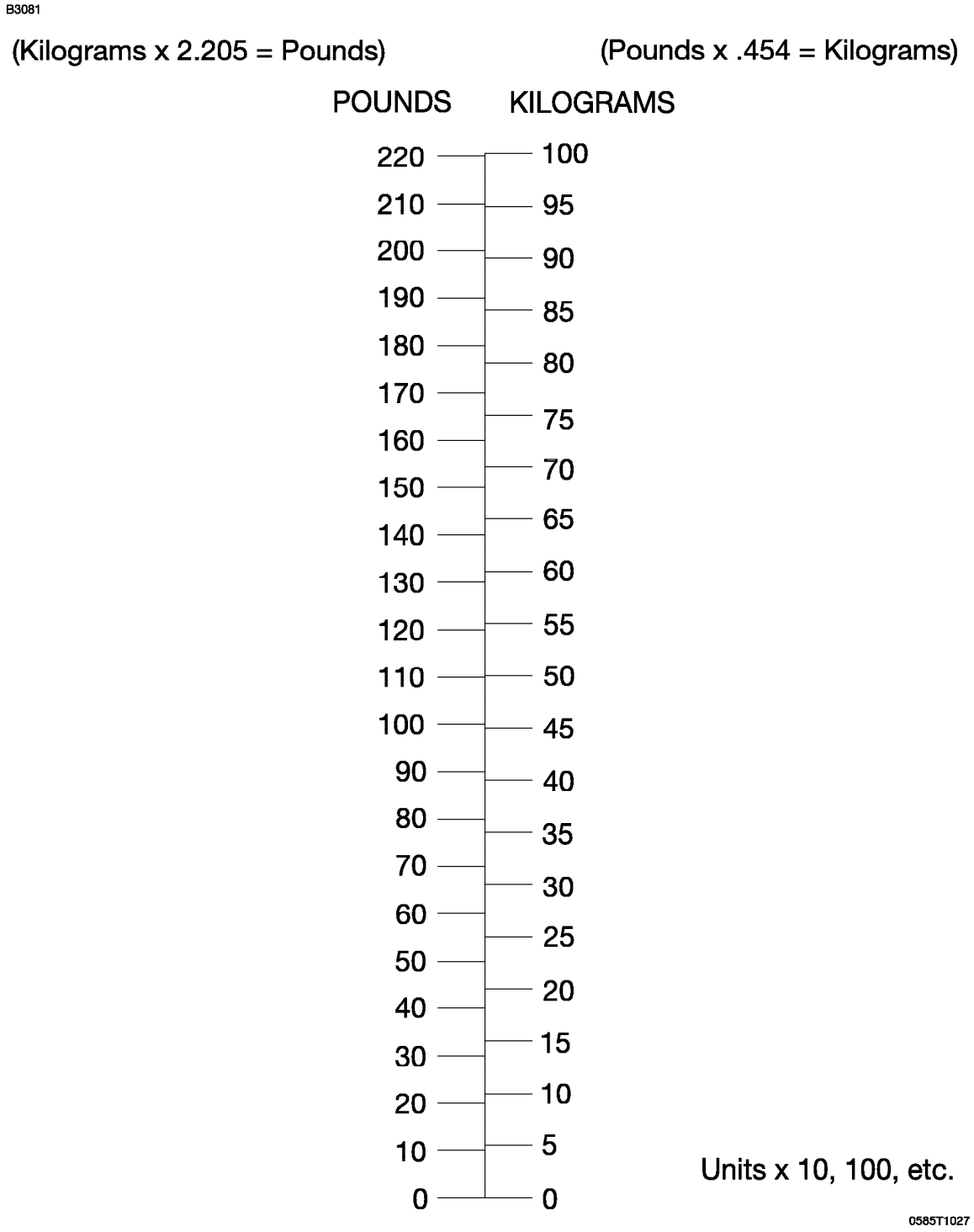

Figure 1-2. Weight Conversions (Sheet 2)

(Meters × 3.281 = Feet) (Feet × .305 = Meters)

METERS INTO FEET
METRES EN PIEDS

m	0	1	2	3	4	5	6	7	8	9
	feet	feet	feet	feet	feet	feet	feet	feet	feet	feet
0	- - -	3.281	6.562	9.842	13.123	16.404	19.685	22.956	26.247	29.528
10	32.808	36.089	39.370	42.651	45.932	49.212	52.493	55.774	59.055	62.336
20	65.617	68.897	72.178	75.459	78.740	82.021	85.302	88.582	91.863	95.144
30	98.425	101.71	104.99	108.27	111.55	114.83	118.11	121.39	124.67	127.95
40	131.23	134.51	137.79	141.08	144.36	147.64	150.92	154.20	157.48	160.76
50	164.04	167.32	170.60	173.86	177.16	180.45	183.73	187.01	190.29	193.57
60	195.85	200.13	203.41	206.69	209.97	213.25	216.53	219.82	223.10	226.38
70	229.66	232.94	236.22	239.50	242.78	246.06	249.34	252.62	255.90	259.19
80	262.47	265.75	269.03	272.31	275.59	278.87	282.15	285.43	288.71	291.58
90	295.27	298.56	301.84	305.12	308.40	311.68	314.96	318.24	321.52	324.80
100	328.08	331.36	334.64	337.93	341.21	344.49	347.77	351.05	354.33	357.61

FEET INTO METERS
PIEDS EN METRES

ft	0	1	2	3	4	5	6	7	8	9
	m	m	m	m	m	m	m	m	m	m
0	- - -	0.305	0.610	0.914	1.219	1.524	1.829	2.134	2.438	2.743
10	3.048	3.353	3.658	3.962	4.267	4.572	4.877	5.182	5.486	5.791
20	6.096	6.401	6.706	7.010	7.315	7.620	7.925	8.230	8.534	8.839
30	9.144	9.449	9.754	10.058	10.363	10.668	10.973	11.278	11.582	11.887
40	12.192	12.497	12.802	13.106	13.411	13.716	14.021	14.326	14.630	14.935
50	15.240	15.545	15.850	16.154	16.459	16.754	17.069	17.374	17.678	17.983
60	18.288	18.593	18.898	19.202	19.507	19.812	20.117	20.422	20.726	21.031
70	21.336	21.641	21.946	22.250	22.555	22.860	23.165	23.470	23.774	24.079
80	24.384	24.689	24.994	25.298	25.603	25.908	26.213	26.518	26.822	27.127
90	27.432	27.737	28.042	28.346	28.651	28.956	29.261	29.566	29.870	30.175
100	30.480	30.785	31.090	31.394	31.699	32.004	32.309	32.614	32.918	33.223

Figure 1-3. Length Conversions (Sheet 1 of 2)

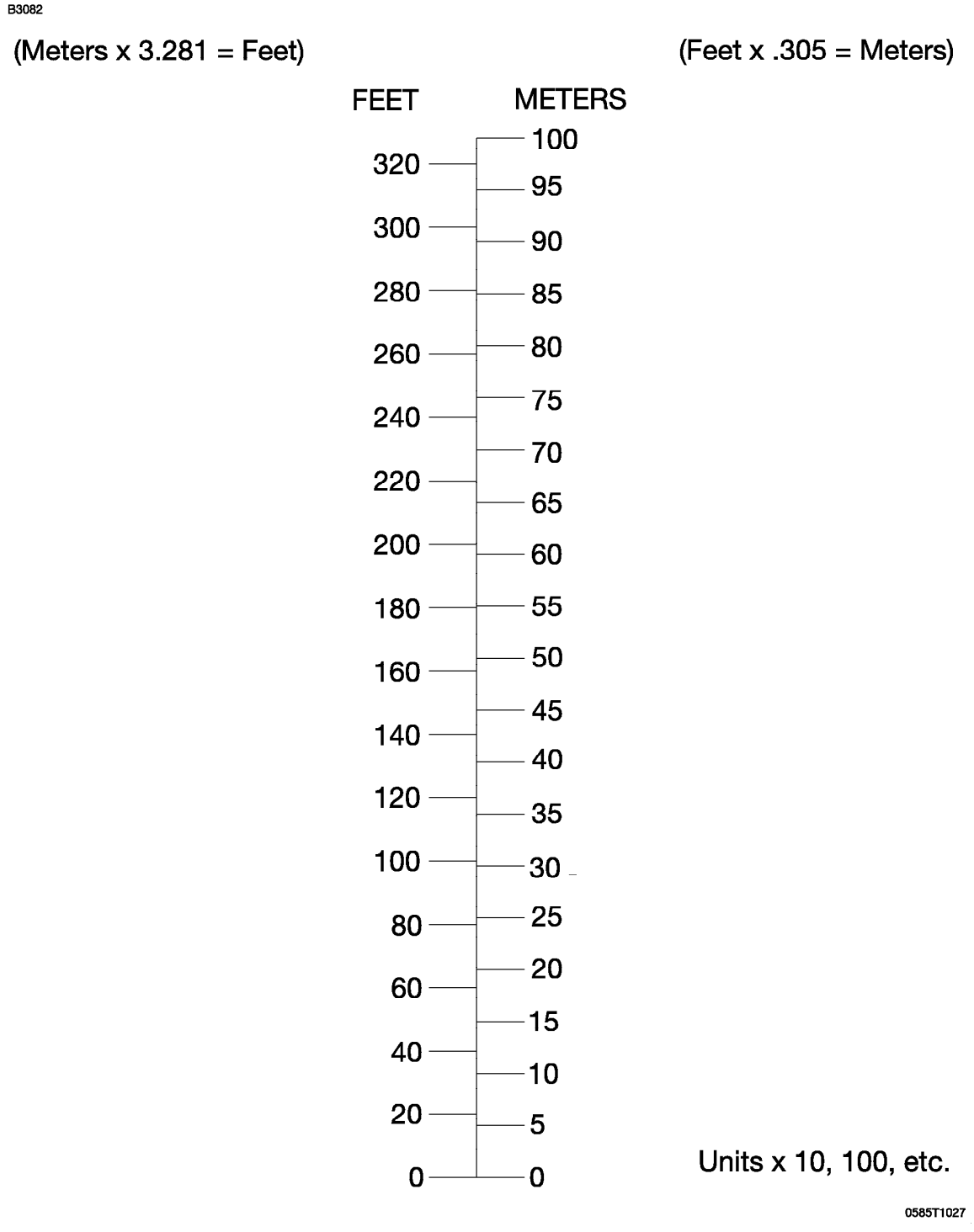

Figure 1-3. Length Conversions (Sheet 2)

(Centimeters × .394 = Inches) (Inches × 2.54 = Centimeters)

CENTIMETERS INTO INCHES
CENTIMETRES EN POUCES

cm	0	1	2	3	4	5	6	7	8	9
	in.	in.	in.	in.	in.	in.	in.	in.	in.	in.
0	- - -	0.394	0.787	1.181	1.575	1.969	2.362	2.756	3.150	3.543
10	3.937	4.331	4.724	5.118	5.512	5.906	6.299	6.693	7.087	7.480
20	7.874	8.268	8.661	9.055	9.449	9.843	10.236	10.630	11.024	11.417
30	11.811	12.205	12.598	12.992	13.386	13.780	14.173	14.567	14.961	15.354
40	15.748	16.142	16.535	16.929	17.323	17.717	18.110	18.504	18.898	19.291
50	19.685	20.079	20.472	20.866	21.260	21.654	22.047	22.441	22.835	23.228
60	23.622	24.016	24.409	24.803	25.197	25.591	25.984	26.378	26.772	27.164
70	27.559	27.953	28.346	28.740	29.134	29.528	29.921	30.315	30.709	31.102
80	31.496	31.890	32.283	32.677	33.071	33.465	33.858	34.252	34.646	35.039
90	35.433	35.827	36.220	36.614	37.008	37.402	37.795	38.189	38.583	38.976
100	39.370	39.764	40.157	40.551	40.945	41.339	41.732	42.126	42.520	42.913

INCHES INTO CENTIMETERS
POUCES EN CENTIMETRES

in.	0	1	2	3	4	5	6	7	8	9
	cm	cm	cm	cm	cm	cm	cm	cm	cm	cm
0	- - -	2.54	5.08	7.62	10.16	12.70	15.24	17.78	20.32	22.96
10	25.40	27.94	30.48	33.02	35.56	38.10	40.64	43.18	45.72	48.26
20	50.80	53.34	55.88	58.42	60.96	63.50	66.04	68.58	71.12	73.66
30	76.20	78.74	81.28	83.82	86.36	88.90	91.44	93.98	96.52	99.06
40	101.60	104.14	106.68	109.22	111.76	114.30	116.84	119.38	121.92	124.46
50	127.00	129.54	132.08	134.62	137.16	139.70	142.24	144.78	147.32	149.86
60	152.40	154.94	157.48	160.02	162.56	165.10	167.64	170.18	172.72	175.26
70	177.80	180.34	182.88	185.42	187.96	190.50	193.04	195.58	198.12	200.66
80	203.20	205.74	208.28	210.82	213.36	215.90	218.44	220.98	223.52	226.06
90	228.60	231.14	233.68	236.22	238.76	241.30	243.84	246.38	248.92	251.46
100	254.00	256.54	259.08	261.62	264.16	266.70	269.24	271.78	274.32	276.86

Figure 1-4. Length Conversions (Sheet 1 of 2)

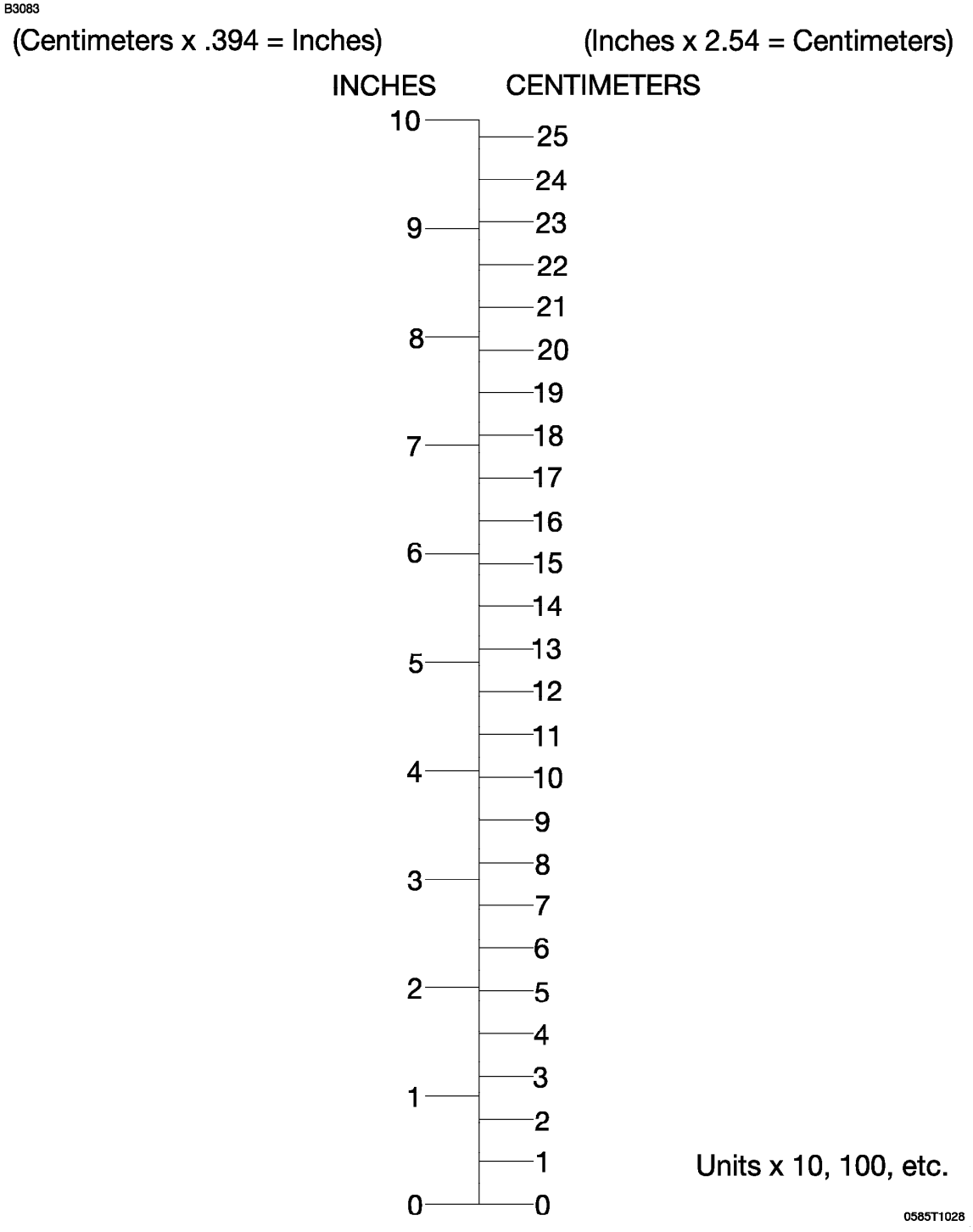

Figure 1-4. Length Conversions (Sheet 2)

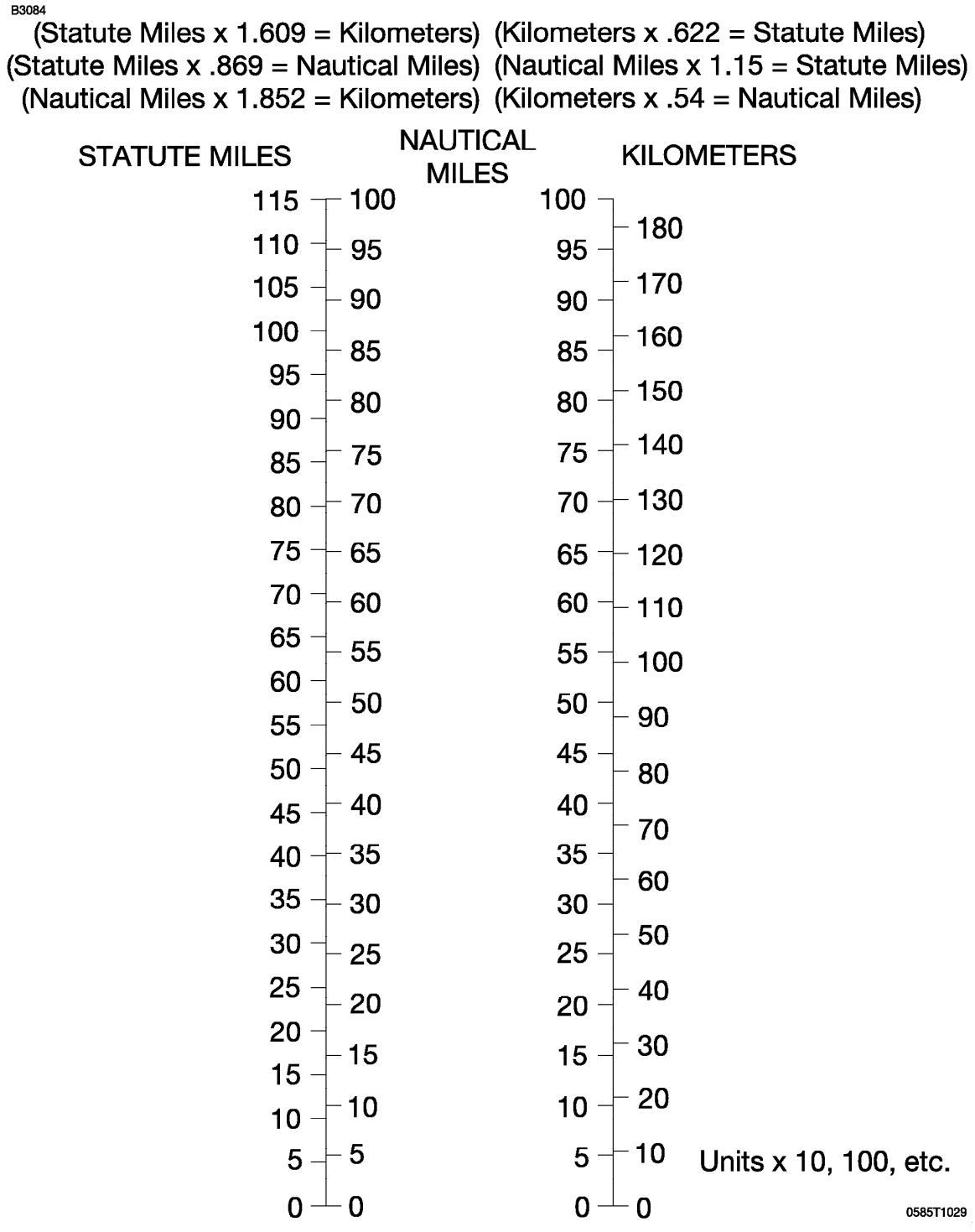

Figure 1-5. Distance Conversions

(Imperial Gallons × 4.546 = Liters) (Liters × .22 = Imperial Gallons)

LITERS INTO IMPERIAL GALLONS
LITRES EN GALLONS IMPERIAL

Lt	0	1	2	3	4	5	6	7	8	9
	IG	IG	IG	IG	IG	IG	IG	IG	IG	IG
0	- - -	0.220	0.440	0.660	0.880	1.100	1.320	1.540	1.760	1.980
10	2.200	2.420	2.640	2.860	3.080	3.300	3.520	3.740	3.960	4.180
20	4.400	4.620	4.840	5.059	5.279	5.499	5.719	5.939	6.159	6.379
30	6.599	6.819	7.039	7.259	7.479	7.699	7.919	8.139	8.359	8.579
40	8.799	9.019	9.239	9.459	9.679	9.899	10.119	10.339	10.559	10.779
50	10.999	11.219	11.439	11.659	11.879	12.099	12.319	12.539	12.759	12.979
60	13.199	13.419	13.639	13.859	14.078	14.298	14.518	14.738	14.958	15.178
70	15.398	15.618	15.838	16.058	16.278	16.498	16.718	16.938	17.158	17.378
80	17.598	17.818	18.038	18.258	18.478	18.698	18.918	19.138	19.358	19.578
90	19.798	20.018	20.238	20.458	20.678	20.898	21.118	21.338	21.558	21.778
100	21.998	22.218	22.438	22.658	22.878	23.098	23.318	23.537	23.757	23.977

IMPERIAL GALLONS INTO LITERS
GALLONS IMPERIAL EN LITRES

IG	0	1	2	3	4	5	6	7	8	9
	Lt	Lt	Lt	Lt	Lt	Lt	Lt	Lt	Lt	Lt
0	- - -	4.546	9.092	13.638	18.184	22.730	27.276	31.822	36.368	40.914
10	45.460	50.006	54.552	59.097	63.643	68.189	72.735	77.281	81.827	86.373
20	90.919	95.465	100.01	104.56	109.10	113.65	118.20	122.74	127.29	131.83
30	136.38	140.93	145.47	150.02	154.56	159.11	163.66	168.20	172.75	177.29
40	181.84	186.38	190.93	195.48	200.02	204.57	209.11	213.66	218.21	222.75
50	227.30	231.84	236.39	240.94	245.48	250.03	254.57	259.12	263.67	268.21
60	272.76	277.30	281.85	286.40	290.94	295.49	300.03	304.58	309.13	313.67
70	318.22	322.76	327.31	331.86	336.40	340.95	345.49	350.04	354.59	359.13
80	363.68	368.22	372.77	377.32	381.86	386.41	390.95	395.50	400.04	404.59
90	409.14	413.68	418.23	422.77	427.32	431.87	436.41	440.96	445.50	450.05
100	454.60	459.14	463.69	468.23	472.78	477.33	481.87	486.42	490.96	495.51

Figure 1-6. Volume Conversions (Sheet 1 of 3)

B3085

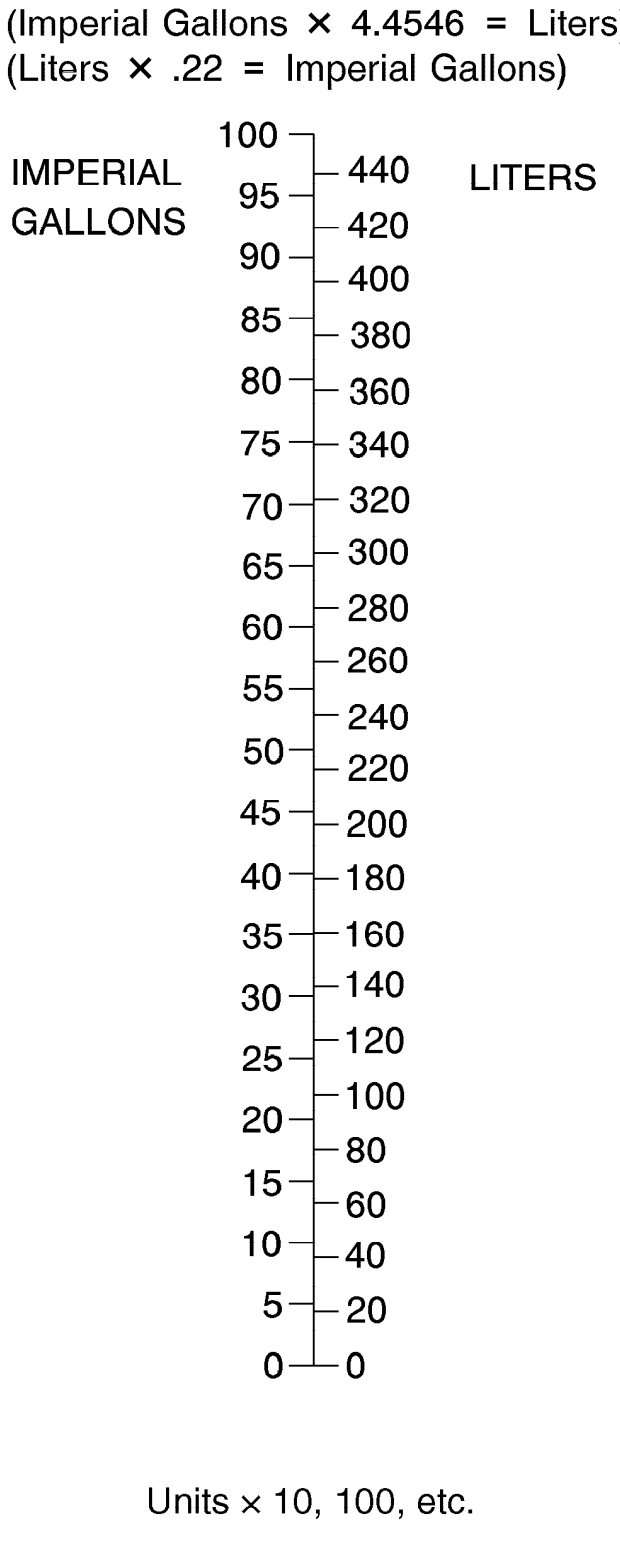

Figure 1-6. Volume Conversions (Sheet 2)

33086

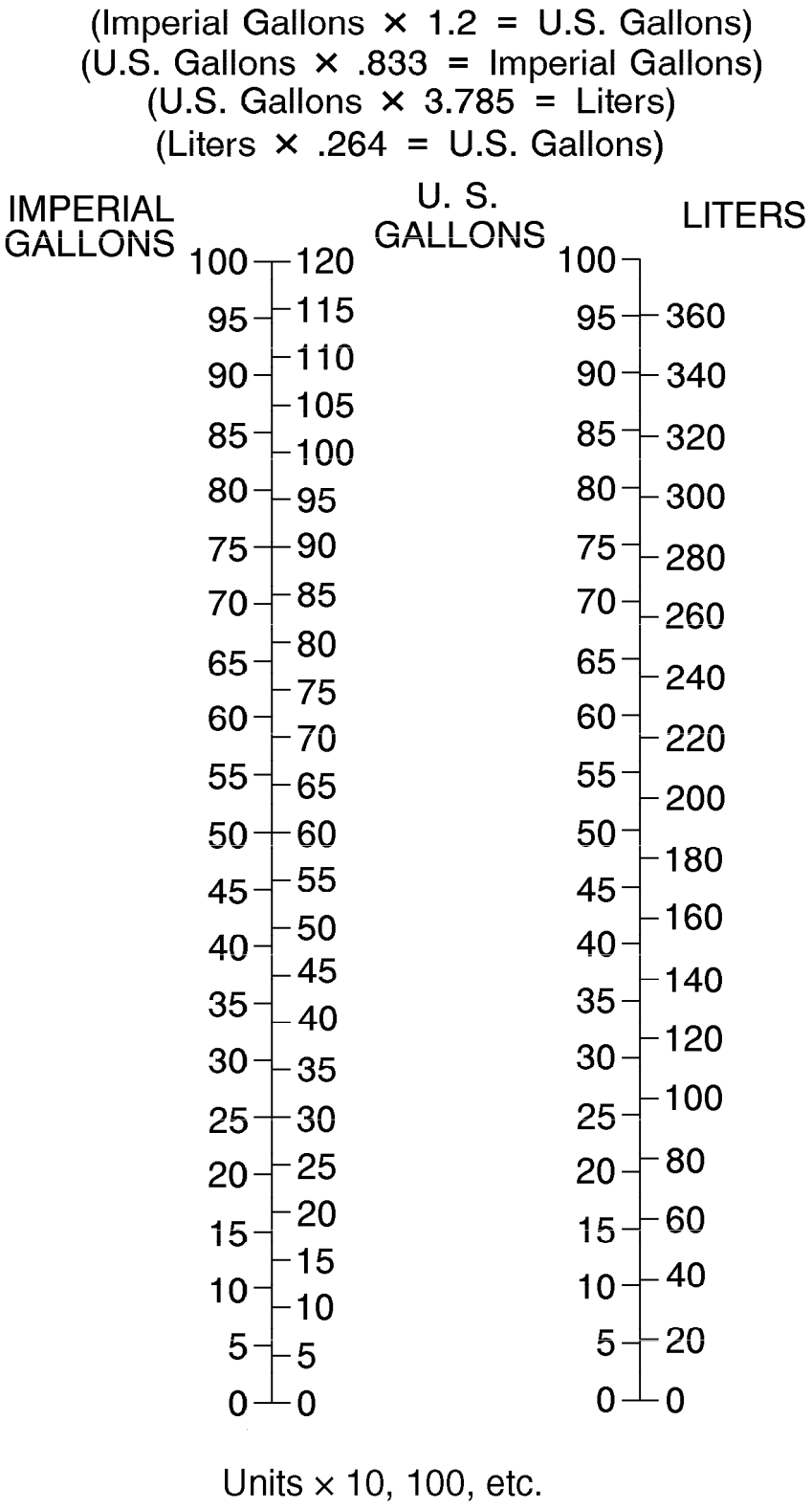

Figure 1-6. Volume Conversions (Sheet 3)

B3087

TEMPERATURE CONVERSIONS

(°F-32) × 5/9 = °C

°F	°C
-40	-40
-30	
-20	-30
-10	
0	-20
10	-10
20	
30	0
40	
50	10
60	
70	20
80	
90	30
100	40
110	
120	50
130	
140	60
150	
160	70
170	
180	80
190	
200	90
210	100
220	
230	110
240	
250	120
260	
270	130
280	140
290	
300	150
310	
320	160

°C × 9/5 + 32 = °F

°F	°C
320	160
340	
360	180
380	
400	200
420	
440	220
460	
480	240
500	
520	260
540	
560	280
580	
600	300
620	
640	320
660	
680	340
700	
720	360
740	
760	380
780	
800	400
820	
840	420
860	
880	440
900	
920	460
940	
960	480
980	
1000	500
1020	
1040	520
	540
	560

0585T1034

Figure 1-7. Temperature Conversions

PRESSURE CONVERSION
HECTOPASCALS (MILLIBARS) TO INCHES MERCURY (inHG)

B3995

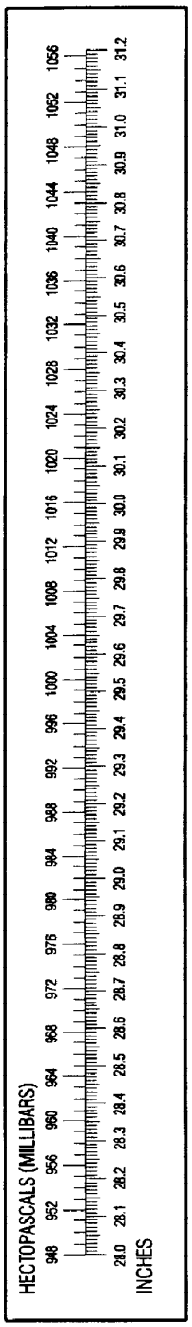

Figure 1-8. Hectopascals to Inches Mercury

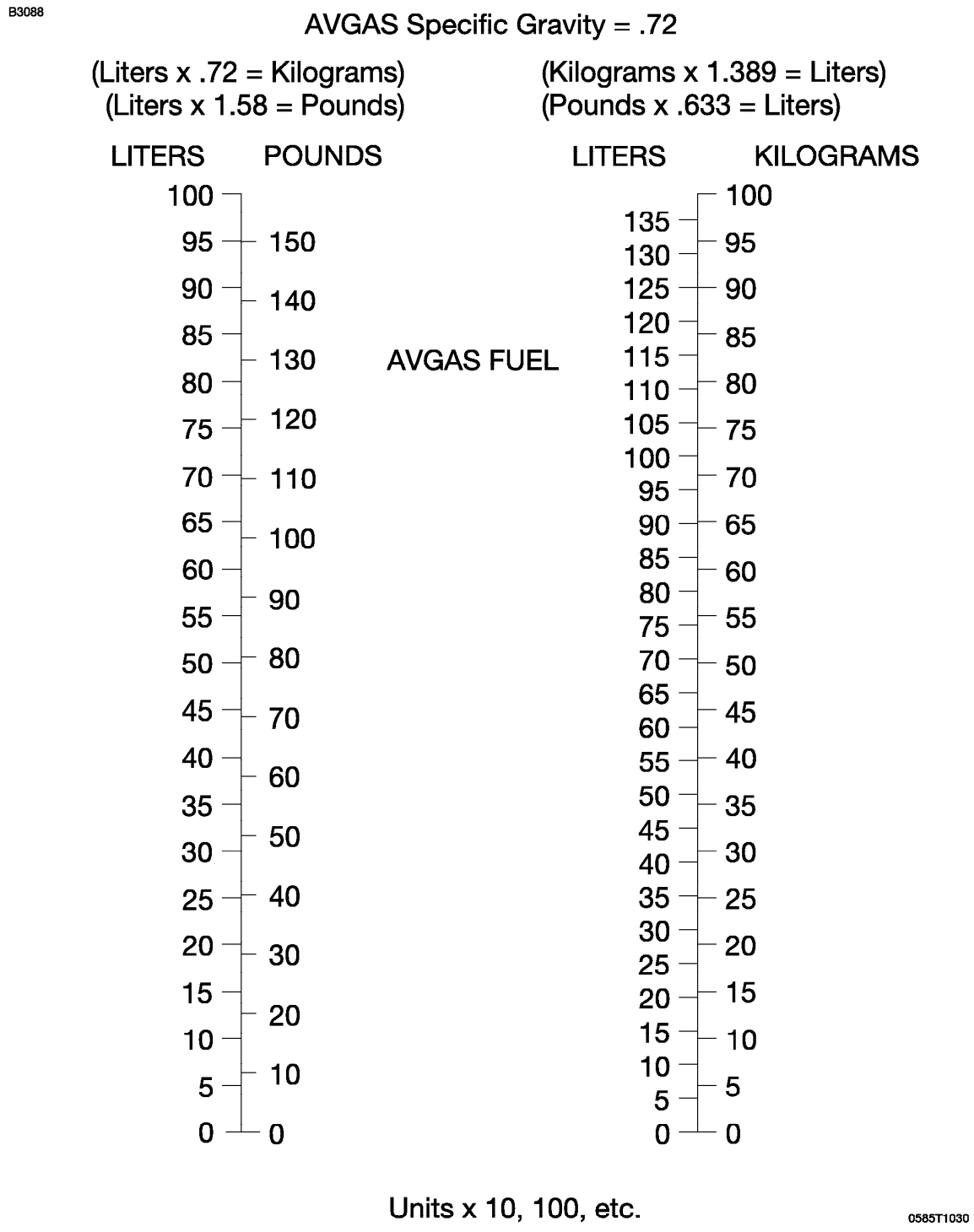

Figure 1-9. Volume to Weight Conversion

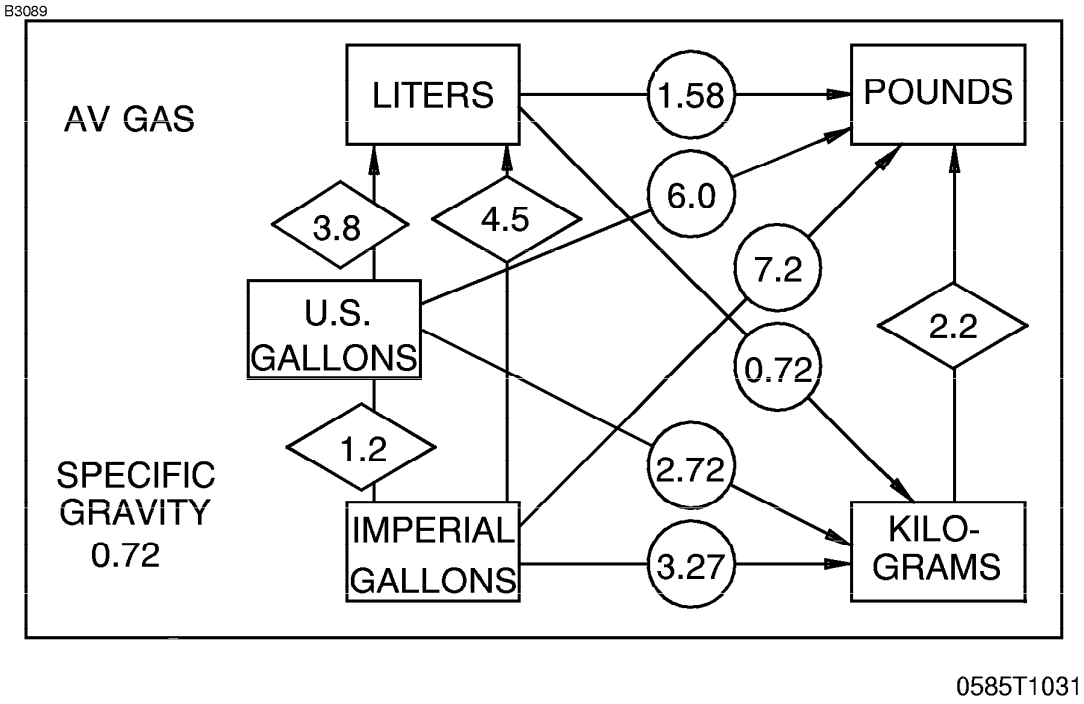

Figure 1-10. Quick Conversions

OPERATING LIMITATIONS

TABLE OF CONTENTS

Page

Introduction 2-3
Airspeed Limitations 2-4
Airspeed Indicator Markings 2-5
Powerplant Limitations 2-6
Powerplant Instrument Markings 2-7
Weight Limits 2-8
Normal Category 2-8
Utility Category 2-8
Center Of Gravity Limits 2-8
Normal Category 2-8
Utility Category 2-9
Maneuver Limits 2-9
Normal Category 2-9
Utility Category 2-10
Flight Load Factor Limits 2-11
Normal Category 2-11
Utility Category 2-11
Kinds Of Operation Limits 2-11
Kinds Of Operations Equipment List 2-12
Fuel Limitations 2-16
Flap Limitations 2-16
System Limitations 2-17
Aux Audio System 2-17
12V Power System 2-17
G1000 Limitations 2-18
GPS-WAAS 2-19
Bendix/King KAP 140 2 Axis Autopilot (if installed) 2-19
Placards 2-20

INTRODUCTION

Section 2 includes operating limitations, instrument markings, and basic placards necessary for the safe operation of the airplane, its engine, standard systems and standard equipment. The limitations included in this section and in Section 9 have been approved by the Federal Aviation Administration. Observance of these operating limitations is required by Federal Aviation Regulations.

NOTE

- Refer to the Supplements, Section 9, of this Pilot's Operating Handbook for amended operating limitations, operating procedures, performance data and other necessary information for airplanes equipped with specific options.

- The airspeeds listed in Figure 2-1, Airspeed Limitations, and Figure 2-2, Airspeed Indicator Markings, are based on Airspeed Calibration data shown in Section 5 with the normal static source. If the alternate static source is being used, ample margins should be observed to allow for the airspeed calibration variations between the normal and alternate static sources as shown in Section 5.

The Cessna Model 172S is certificated under FAA Type Certificate No. 3A12.

AIRSPEED LIMITATIONS

Airspeed limitations and their operational significance are shown in Figure 2-1. Maneuvering speeds shown apply to normal category operations. The utility category maneuvering speed is 98 KIAS at 2200 pounds.

AIRSPEED LIMITATIONS

SYMBOL	SPEED	KCAS	KIAS	REMARKS
V_{NE}	Never Exceed Speed	160	163	Do not exceed this speed in any operation.
V_{NO}	Maximum Structural Cruising Speed	126	129	Do not exceed this speed except in smooth air, and then only with caution.
V_A	Maneuvering Speed: 2550 Pounds 2200 Pounds 1900 Pounds	 102 95 88	 105 98 90	Do not make full or abrupt control movements above this speed.
V_{FE}	Maximum Flap Extended Speed: Flaps 10° Flaps 10° to FULL	 107 85	 110 85	Do not exceed this speed with flaps down.
-----	Maximum Window Open Speed	160	163	Do not exceed this speed with windows open.

Figure 2-1

AIRSPEED INDICATOR MARKINGS

Airspeed indicator markings and their color code significance are shown in Figure 2-2.

AIRSPEED INDICATOR MARKINGS

MARKING	KIAS VALUE OR RANGE	SIGNIFICANCE
Red Arc*	20 - 40	Low airspeed warning.
White Arc	40 - 85	Full Flap Operating Range. Lower limit is maximum weight V_{S0} in landing configuration. Upper limit is maximum speed permissible with flaps extended.
Green Arc	48 - 129	Normal Operating Range. Lower limit is maximum weight V_{S1} at most forward C.G. with flaps retracted. Upper limit is maximum structural cruising speed.
Yellow Arc	129 - 163	Operations must be conducted with caution and only in smooth air.
Red Line	163	Maximum speed for all operations.

* G1000 airspeed indicator only.

Figure 2-2

POWERPLANT LIMITATIONS

Engine Manufacturer: Textron Lycoming.
Engine Model Number: IO-360-L2A.
Maximum Power: 180 BHP rating.
Engine Operating Limits for Takeoff and Continuous Operations:

Maximum Engine Speed: . . . . . 2700 RPM

NOTE

The static RPM range at full throttle is 2300 - 2400 RPM.

Maximum Oil Temperature: . . . . . 245°F (118°C)
Oil Pressure, Minimum: . . . . . 20 PSI
Oil Pressure, Maximum: . . . . . 115 PSI

Fuel Grade: See Fuel Limitations.

Oil Grade (Specification):

MIL-L-6082 or SAE J1966 Aviation Grade Straight Mineral Oil or MIL-L-22851 or SAE J1899 Ashless Dispersant Oil. Oil must comply with the latest revision and/or supplement for Textron Lycoming Service Instruction No. 1014.

Propeller Manufacturer: McCauley Propeller Systems.
Propeller Model Number: 1A170E/JHA7660.

Propeller Diameter	Maximum:	76 INCHES
	Minimum:	75 INCHES

POWERPLANT INSTRUMENT MARKINGS

Powerplant instrument markings and their color code significance are shown in Figure 2-3. Operation with indications in the red range is prohibited. Avoid operating with indicators in the yellow range.

POWERPLANT INSTRUMENT MARKINGS

INSTRUMENT	RED LINE (MIN)	RED ARC (LWR)	YELLOW ARC	GREEN ARC (NORMAL OPERATING RANGE)	RED ARC (UPR)
Tachometer **Sea Level** **5000 Feet** **10,000 Feet**	----	----	----	RPM 2100 to 2500 2100 to 2600 2100 to 2700	RPM 2700* to 3000
Cylinder Head Temperature	----	----	----	200 to 500°F	----
Oil Temperature	----	----	----	100 to 245°F	245* to 250°F
Oil Pressure	----	0 to 20 PSI	----	50 to 90 PSI	115* to 120 PSI
Fuel Quantity	0 (1.5 Gallons Unusable Each Tank)	----	0 to 5 Gallons	5 to 24 Gallons	----
Fuel Flow	----	----	----	0 to 12 GPH	----
Vacuum Indicator	----	----	----	4.5 to 5.5 in.hg.	----

* Maximum operating limit is lower end of red arc.

Figure 2-3

WEIGHT LIMITS

NORMAL CATEGORY

Maximum Ramp Weight:	2558 POUNDS
Maximum Takeoff Weight:	2550 POUNDS
Maximum Landing Weight:	2550 POUNDS

Maximum Weight in Baggage Compartment:

Baggage Area A - Station 82 to 108:	120 POUNDS
Baggage Area B - Station 108 to 142:	50 POUNDS

NOTE

The maximum combined weight capacity for baggage areas A and B is 120 lbs.

UTILITY CATEGORY

Maximum Ramp Weight:	2208 POUNDS
Maximum Takeoff Weight:	2200 POUNDS
Maximum Landing Weight:	2200 POUNDS

Maximum Weight in Baggage Compartment: In the utility category, the baggage compartment must be empty and rear seat must not be occupied.

CENTER-OF-GRAVITY LIMITS

NORMAL CATEGORY

Center-of-Gravity Range:

Forward: 35.0 inches aft of datum at 1950 pounds or less, with straight line variation to 41.0 inches aft of datum at 2550 pounds.

Aft: 47.3 inches aft of datum at all weights.

Reference Datum: Lower portion of front face of firewall.

CENTER OF GRAVITY LIMITS (Continued)

UTILITY CATEGORY

Center of Gravity Range:

Forward: 35.0 inches aft of datum at 1950 pounds or less, with straight line variation to 37.5 inches aft of datum at 2200 pounds.

Aft: 40.5 inches aft of datum at all weights.

Reference Datum: Lower portion of front face of firewall.

MANEUVER LIMITS

NORMAL CATEGORY

This airplane is certificated in both the normal and utility category. The normal category is applicable to aircraft intended for non aerobatic operations. These include any maneuvers incidental to normal flying, stalls (except whip stalls), lazy eights, chandelles, and turns in which the angle-of-bank is not more than 60°.

NORMAL CATEGORY MANEUVERS AND RECOMMENDED ENTRY SPEED*

Chandelles	105 KNOTS
Lazy Eights	105 KNOTS
Steep Turns	95 KNOTS
Stalls (Except Whip Stalls)	Slow Deceleration

*** Abrupt use of the controls is prohibited above 105 KNOTS.**

(Continued Next Page)

MANEUVER LIMITS (Continued)

UTILITY CATEGORY

This airplane is not designed for purely aerobatic flight. However, in the acquisition of various certificates such as commercial pilot and flight instructor, certain maneuvers are required by the FAA. All of these maneuvers are permitted in this airplane when operated in the utility category.

In the utility category, the rear seat must not be occupied and the baggage compartment must be empty .

UTILITY CATEGORY MANEUVERS AND RECOMMENDED ENTRY SPEED*

Chandelles	105 KNOTS
Lazy Eights	105 KNOTS
Steep Turns	95 KNOTS
Spins	Slow Deceleration
Stalls (Except Whip Stalls)	Slow Deceleration

*** Abrupt use of the controls is prohibited above 98 KNOTS.**

Aerobatics that may impose high loads should not be attempted. The important thing to bear in mind in flight maneuvers is that the airplane is clean in aerodynamic design and will build up speed quickly with the nose down. Proper speed control is an essential requirement for execution of any maneuver, and care should always be exercised to avoid excessive speed which in turn can impose excessive loads. In the execution of all maneuvers, avoid abrupt use of controls.

FLIGHT LOAD FACTOR LIMITS

NORMAL CATEGORY

Flight Load Factors (Maximum Takeoff Weight - 2550 POUNDS):

*Flaps Up	+3.8g, -1.52g
*Flaps Down	+3.0g

* The design load factors are 150% of the above, and in all cases, the structure meets or exceeds design loads.

UTILITY CATEGORY

Flight Load Factors (Maximum Takeoff Weight - 2200 POUNDS):

*Flaps Up	+4.4g, -1.76g
*Flaps Down	+3.0g

* The design load factors are 150% of the above, and in all cases, the structure meets or exceeds design loads.

KINDS OF OPERATION LIMITS

The Cessna 172S Nav III airplane is approved for day and night, VFR and IFR operations. Flight into known-icing conditions is prohibited.

The minimum equipment for approved operations required under the Operating Rules are defined by 14 CFR Part 91 and 14 CFR Part 135, as applicable.

The following Kinds of Operations Equipment List (KOEL) identifies the equipment required to be operational for airplane airworthiness in the listed kind of operations.

KINDS OF OPERATIONS EQUIPMENT LIST

System, Instrument, Equipment and/or Function	KIND OF OPERATION				COMMENTS
	VFR DAY	VFR NIGHT	IFR DAY	IFR NIGHT	
PLACARDS AND MARKINGS					
172S Nav III POH/AFM	1	1	1	1	Accessible to pilot in flight
Garmin G1000™ Cockpit Reference Guide	1	1	1	1	Accessible to pilot in flight
AIR CONDITIONING					
1. Forward Avionics Fan	1	1	1	1	
2. PFD Fan	0	0	0	0	
3. MFD Fan	0	0	0	0	
4. Aft Avionics Fan	1	1	1	1	
AUTOFLIGHT					
1. Bendix/King KAP 140 POH Supplement	0	0	A/R	A/R	Accessible to pilot in flight when using autopilot
COMMUNICATIONS					
1. VHF COM	0	0	1	1	
ELECTRICAL POWER					
1. 24V Main Battery	1	1	1	1	
2. 28V Alternator	1	1	1	1	
3. 24V Standby Battery	0	*	*	*	*Refer to Note 1
4. Main Ammeter	1	1	1	1	
5. Standby Ammeter	0	*	*	*	*Refer to Note 1

NOTE

1. The European Aviation Safety Agency (EASA) requires the 24V Standby Battery and Standby Ammeter to successfully complete the pre-flight check before operating the airplane in VFR night, IFR day, or IFR night conditions in Europe. Correct operation of the 24V Standby Battery and Standby Ammeter is recommended for all other operations.

(Continued Next Page)

KINDS OF OPERATIONS EQUIPMENT LIST (Continued)

System, Instrument, Equipment and/or Function	KIND OF OPERATION				COMMENTS
	VFR DAY	VFR NIGHT	IFR DAY	IFR NIGHT	
EQUIPMENT AND FURNISHINGS					
1. Seat Belt Assembly	1	1	1	1	Each Seat Occupant
2. Shoulder Harness	1	1	1	1	Front Seat Occupants
FLIGHT CONTROLS					
1. Flap Position Indicator	1	1	1	1	
2. Flap Motor	1	1	1	1	
3. Elevator Trim System	1	1	1	1	
4. Elevator Trim Indicator	1	1	1	1	
FUEL SYSTEM					
1. Electric Fuel Pump	1	1	1	1	
2. Fuel Quantity Indicator - LH Tank	1	1	1	1	
3. Fuel Quantity Indicator - RH Tank	1	1	1	1	
ICE AND RAIN PROTECTION					
1. Alternate Static Air Source	0	0	1	1	
2. Alternate Induction Air System	0	0	1	1	
INDICATING/RECORDING SYSTEM					
1. Stall Warning System	1	1	1	1	
2. System Annunciator and Warning Displays	1	1	1	1	
LANDING GEAR					
1. Wheel Fairings	0	0	0	0	Removable

(Continued Next Page)

KINDS OF OPERATIONS EQUIPMENT LIST (Continued)

System, Instrument, Equipment and/or Function	KIND OF OPERATION				COMMENTS
	VFR DAY	VFR NIGHT	IFR DAY	IFR NIGHT	
LIGHTING					
1. PFD Bezel Lighting	0	0	0	1	
2. PFD Backlighting	*	1	1	1	*Refer to Note 2
3. MFD Bezel Lighting	0	0	0	1	
4. MFD Backlighting	*	1	1	1	*Refer to Note 3
5. Switch and Circuit Breaker Panel Lighting	0	1	0	1	
6. Airspeed Indicator (Standby) Internal Lighting	0	1	0	1	
7. Altimeter (Standby) Internal Lighting	0	1	0	1	
8. Non-stabilized Magnetic Compass Internal Lighting	0	1	0	1	
9. Attitude Indicator (Vacuum) Internal Lighting	0	1	0	1	
10. Cockpit Flood Light	0	1	0	1	
11. Aircraft Position (NAV) Lights	0	1	1	1	
12. STROBE Light System	1	1	1	1	
13. BEACON Light	0	0	0	0	
14. TAXI Light	0	0	0	0	
15. LAND (Landing) Light	0	1	0	1	Operations for hire only

NOTE

2. PFD backlighting is required for day VFR flight if MFD backlighting has failed. Display backup mode must be active so engine indicators are shown.

3. MFD backlighting is required for day VFR flight if PFD backlighting has failed. Display backup mode must be active so flight instruments are shown.

(Continued Next Page)

KINDS OF OPERATIONS EQUIPMENT LIST (Continued)

System, Instrument, Equipment and/or Function	KIND OF OPERATION				COMMENTS
	VFR DAY	VFR NIGHT	IFR DAY	IFR NIGHT	
NAVIGATION AND PITOT-STATIC SYSTEM					
1. G1000 Airspeed Indicator	1	1	1	1	
2. Standby Airspeed Indicator	0	0	1	1	
3. G1000 Altimeter	1	1	1	1	
4. Standby Altimeter	0	0	1	1	
5. G1000 Vertical Speed Indicator	0	0	0	0	
6. G1000 Attitude Indicator	0	0	1	1	
7. Attitude Indicator - Vacuum (Standby)	0	0	1	1	
8. G1000 Directional Indicator (HSI)	0	0	1	1	
9. G1000 Turn Coordinator	0	0	1	1	
10. Non-stabilized Magnetic Compass	1	1	1	1	
11. VHF Navigation Radio (VOR/LOC/GS)	0	0	A/R	A/R	As Required Per Procedure
12. GPS Receiver/Navigator	0	0	A/R	A/R	As Required Per Procedure
13. Marker Beacon Receiver	0	0	A/R	A/R	As Required Per Procedure
14. Blind Altitude Encoder	A/R	A/R	1	1	As Required Per Procedure
15. Clock	0	0	1	1	
VACUUM					
1. Engine-driven Vacuum Pump	0	0	1	1	
2. Vacuum Indicator	0	0	1	1	
ENGINE FUEL AND CONTROL					
1. Fuel Flow Indicator	1	1	1	1	
ENGINE INDICATING					
1. Tachometer (RPM)	1	1	1	1	
2. Cylinder Head Temperature (CHT) Indicator	0	0	0	0	
3. Oil Pressure Indicator	1	1	1	1	
4. Oil Temperature Indicator	1	1	1	1	
ENGINE OIL					
1. Engine Crankcase Dipstick	1	1	1	1	

FUEL LIMITATIONS

Total Fuel: . . . . 56 U.S. gallons (2 tanks at 28.0 gallons each)

Usable Fuel (all flight conditions): . . . . . 53.0 U.S. gallons

Unusable Fuel: . . . . . 3.0 U.S. gallons (1.5 gallons each tank)

NOTE

To ensure maximum fuel capacity and minimize cross-feeding when refueling, always park the airplane in a wings-level, normal ground attitude and place the fuel selector in the Left or Right position. Refer to Figure 1-1 for normal ground attitude definition.

Takeoff and land with the fuel selector valve handle in the BOTH position.

Maximum slip or skid duration with one tank dry: 30 seconds.

Operation on either LEFT or RIGHT tank limited to level flight only.

With 1/4 tank or less, prolonged uncoordinated flight is prohibited when operating on either left or right tank.

Fuel remaining in the tank after the fuel quantity indicator reads 0 (red line) cannot be safely used in flight.

Approved Fuel Grades (and Colors):
100LL Grade Aviation Fuel (Blue).
100 Grade Aviation Fuel (Green).

FLAP LIMITATIONS

Approved Takeoff Range: . . . . . UP to 10°
Approved Landing Range: . . . . . UP to FULL

SYSTEM LIMITATIONS

AUX AUDIO SYSTEM

Use of the AUX AUDIO IN entertainment input is prohibited during takeoff and landing.

Use of the AUX AUDIO IN entertainment audio input and portable electronic devices (PED) such as cellular telephones, games, cassette, CD or MP3 players is prohibited under IFR unless the operator of the airplane has determined that the use of the Aux Audio System and the connected portable electronic device(s) will not cause interference with the navigation or communication system of the airplane.

12V POWER SYSTEM

The 12 Volt Power System (POWER OUTLET 12V - 10A) is not certified for supplying power to flight-critical communications or navigation devices.

Use of the 12 Volt Power System is prohibited during takeoff and landing.

Use of the 12 Volt Power System is prohibited under IFR unless the operator of the airplane has determined that the use of the 12 VDC power supply and connected portable electronic device(s) will not cause interference with the navigation or communication systems of the airplane.

G1000 LIMITATIONS

The current Garmin G1000 Cockpit Reference Guide (CRG) Part Number and System Software Version that must be available to the pilot during flight are displayed on the MFD AUX group, SYSTEM STATUS page.

Use of the NAVIGATION MAP page for pilotage navigation is prohibited. The NAVIGATION MAP is intended only to enhance situational awareness. Navigation is to be conducted using only current charts, data and authorized navigation facilities.

Use of the TRAFFIC MAP to maneuver the airplane to avoid traffic is prohibited. The TRAFFIC INFORMATION SYSTEM (TIS) is intended for advisory use only. TIS is intended only to help the pilot to visually locate traffic. It is the responsibility of the pilot to see and maneuver to avoid traffic.

Use of the TERRAIN PROXIMITY information for primary terrain avoidance is prohibited. The TERRAIN PROXIMITY map is intended only to enhance situational awareness. It is the pilot's responsibility to provide terrain clearance at all times.

Navigation using the G1000 is not authorized north of 70° North latitude or south of 70° South latitude due to unsuitability of the magnetic fields near the Earth's poles. In addition, operations are not authorized in the following two regions:

1. North of 65° North latitude between longitude 75° W and 120° W (Northern Canada).
2. South of 55° South latitude between longitude 120° E and 165° E (region south of Australia and New Zealand).

The COM 1/2 (split COM) function of the GMA 1347 Audio Panel is not approved for use. During COM 1/2 operation, transmission by one crew member inhibits reception by the other crew member.

(Continued Next Page)

G1000 LIMITATIONS (Continued)

GPS-WAAS (Airplanes 172S10432 and On)

Use of the Garmin G1000 system for GPS or WAAS navigation under Instrument Flight Rules (IFR) requires that:

1. The airplane must be equipped with an approved and operational alternate means of navigation appropriate to the route being flown (NAV receiver, DME or ADF).
2. For flight planning purposes, if an alternate airport is required, it must have an approved instrument approach procedure, other then GPS or RNAV, that is anticipated to be operational and available at the estimated time of arrival. All equipment required for this procedure must be installed and operational.
3. For procedures requiring a prediction of GPS Receiver Autonomous Integrity Monitoring (RAIM) capability for TSO-C129a (non-WAAS) equipment (e.g. oceanic operations, U.S. RNAV routes, European BRNAV and PRNAV, etc.), the Garmin WAAS Fault Detection/Exclusion Prediction program (006-A0154-01 or later approved version) should be used to confirm the availability of RAIM for the intended route and time of flight. Generic prediction tools do not provide an accurate indication of RAIM availability for the Garmin G1000 system.
4. When flight planning an LNAV/VNAV or LPV approach, the Garmin WAAS Fault Detection/Exclusion Prediction program (006-A0154-01 or later approved version) should be used in addition to any NOTAMs issued from the approach.

BENDIX/KING KAP 140 2 AXIS AUTOPILOT (if installed)

Use of the Bendix/King KAP 140 Autopilot is prohibited when the GMA 1347 Audio Panel is inoperative (since the aural warning will not be provided when Autopilot is disengaged).

PLACARDS

The following information must be displayed in the form of composite or individual placards.

1. In full view of the pilot: (The "DAY-NIGHT-VFR-IFR" entry, shown on the example below, will vary as the airplane is equipped).

The markings and placards installed in this airplane contain operating limitations which must be complied with when operating this airplane in the Normal Category. Other operating limitations which must be complied with when operating this airplane in this category or in the Utility Category are contained in the Pilot's Operating Handbook and FAA Approved Airplane Flight Manual.

Normal Category	No acrobatic maneuvers, including spins, approved.
Utility Category	No acrobatic maneuvers approved, except those listed in the Pilot's Operating Handbook. Baggage compartment and rear seat must not be occupied.
Spin Recovery	Opposite rudder - forward elevator - neutralize controls.

Flight into known icing conditions prohibited.

This airplane is certified for the following flight operations as of date of original airworthiness certificate:

DAY-NIGHT-VFR-IFR

(Continued Next Page)

PLACARDS (Continued)

2. On the fuel selector valve:

TAKEOFF LANDING	BOTH 53.0 GAL.	ALL FLIGHT ATTITUDES
	FUEL SELECTOR	
LEFT 26.5 GAL. LEVEL FLIGHT ONLY		RIGHT 26.5 GAL. LEVEL FLIGHT ONLY

3. Near fuel tank filler cap:

FUEL
100LL/100 MIN. GRADE AVIATION GASOLINE
CAP. 26.5 U.S. GAL. USABLE
CAP 17.5 U.S. GAL USABLE TO BOTTOM
OF FILLER INDICATOR TAB

4. On flap control indicator:

UP to 10°	110 KIAS	(Partial flap range with blue color code; also, mechanical detent at 10°.)
10° to FULL	85 KIAS	(White color code; also, mechanical detent at 20°.)

(Continued Next Page)

PLACARDS (Continued)

5. In baggage compartment:

120 POUNDS MAXIMUM BAGGAGE FORWARD OF BAGGAGE DOOR LATCH 50 POUNDS MAXIMUM BAGGAGE AFT OF BAGGAGE DOOR LATCH MAXIMUM 120 POUNDS COMBINED FOR ADDITIONAL LOADING INSTRUCTIONS SEE WEIGHT AND BALANCE DATA

6. A calibration card must be provided to indicate the accuracy of the magnetic compass in 30° increments.

7. On the oil filler cap:

OIL 8 QTS

8. On control lock:

CAUTION! CONTROL LOCK REMOVE BEFORE STARTING ENGINE

9. Above the PFD:

MANEUVERING SPEED - 105 KIAS

(Continued Next Page)

PLACARDS (Continued)

10. On the Upper Right Side of the Aft Cabin Partition:

EMERGENCY LOCATOR TRANSMITTER INSTALLED AFT OF THIS PARTITION MUST BE SERVICED IN ACCORDANCE WITH FAR PART 91.207.

11. On forward face of firewall adjacent to the battery:

CAUTION 24 VOLTS D.C. THIS AIRCRAFT IS EQUIPPED WITH ALTERNATOR AND A NEGATIVE GROUND SYSTEM. OBSERVE PROPER POLARITY. REVERSE POLARITY WILL DAMAGE ELECTRICAL COMPONENTS.

12. On the upper right instrument panel:

SMOKING PROHIBITED

13. Near the center overhead light control:

Flood Light

EMERGENCY PROCEDURES

TABLE OF CONTENTS

Page

Introduction 3-5

Airspeeds For Emergency Operation 3-5

EMERGENCY PROCEDURES 3-6

ENGINE FAILURES 3-6
Engine Failure During Takeoff Roll 3-6
Engine Failure Immediately After Takeoff 3-6
Engine Failure During Flight (Restart Procedures) 3-6

FORCED LANDINGS 3-7
Emergency Landing Without Engine Power 3-7
Precautionary Landing With Engine Power 3-8
Ditching 3-8

FIRES 3-9
During Start On Ground 3-9
Engine Fire In Flight 3-10
Electrical Fire In Flight 3-10
Cabin Fire 3-11
Wing Fire 3-11

ICING 3-12
Inadvertent Icing Encounter During Flight 3-12
Static Source Blockage
(Erroneous Instrument Reading Suspected) 3-13

(Continued Next Page)

TABLE OF CONTENTS (Continued)

Page

EXCESSIVE FUEL VAPOR 3-13
Fuel Flow Stabilization Procedures 3-13

ABNORMAL LANDINGS 3-14
Landing With A Flat Main Tire 3-14
Landing With A Flat Nose Tire 3-14

ELECTRICAL POWER SUPPLY SYSTEM MALFUNCTIONS 3-15
High Volts Annunciator Comes On or
M BAT AMPS More Than 40 3-15
LOW VOLTS Annunciator Comes On Below 1000 RPM . . 3-17
LOW VOLTS Annunciator Comes On or
Does Not Go Off at Higher RPM 3-17

AIR DATA SYSTEM FAILURE 3-19
Red X - PFD Airspeed Indicator 3-19
Red X - PFD Altitude Indicator 3-19

ATTITUDE AND HEADING REFERENCE SYSTEM (AHRS) FAILURE 3-20
Red X - PFD Attitude Indicator 3-20
Red X - Horizontal Situation Indicator (HSI) 3-20

DISPLAY COOLING ADVISORY 3-20
PFD1 Cooling or MFD1 Cooling Annunciator(s) 3-20

VACUUM SYSTEM FAILURE 3-21
Low Vacuum Annunciator Comes On 3-21

HIGH CARBON MONOXIDE (CO) LEVEL ANNUNCIATOR . 3-21
CO LVL HIGH Annunciator Comes On 3-21
CO LVL HIGH Annunciator Remains On 3-21

(Continued Next Page)

TABLE OF CONTENTS (Continued)

Page

AMPLIFIED EMERGENCY PROCEDURES 3-22
Engine Failure 3-22
Maximum Glide 3-23
Forced Landings 3-24
Landing Without Elevator Control 3-25
Fires 3-25
Emergency Operation In Clouds 3-26
Executing A 180° Turn In Clouds (AHRS FAILED) 3-27
Emergency Descent Through Clouds (AHRS FAILED) . . . 3-28
Recovery From Spiral Dive In The Clouds (AHRS FAILED) 3-29
Inadvertent Flight Into Icing Conditions 3-29
Static Source Blocked 3-30
Spins 3-30
Rough Engine Operation Or Loss Of Power 3-31
Spark Plug Fouling 3-31
Magneto Malfunction 3-31
Idle Power Engine Roughness 3-31
Engine-Driven Fuel Pump Failure 3-32
Excessive Fuel Vapor 3-32
Low Oil Pressure 3-32
Electrical Power Supply System Malfunctions 3-33
Excessive Rate-Of-Charge 3-33
Insufficient Rate-Of-Charge 3-34
High Carbon Monoxide (CO) Level Annunciation 3-36
Other Emergencies 3-36
Windshield Damage 3-36

INTRODUCTION

Section 3 provides checklist and amplified procedures for coping with emergencies that may occur. Emergencies caused by airplane or engine malfunctions are extremely rare if proper preflight inspections and maintenance are practiced. Enroute weather emergencies can be minimized or eliminated by careful flight planning and good judgment when unexpected weather is encountered. However, should an emergency arise, the basic guidelines described in this section should be considered and applied as necessary to correct the problem. In any emergency situation, the most important task is continued control of the airplane and maneuver to execute a successful landing.

Emergency procedures associated with optional or supplemental equipment are found in Section 9, Supplements.

AIRSPEEDS FOR EMERGENCY OPERATION

ENGINE FAILURE AFTER TAKEOFF

Wing Flaps UP	70 KIAS
Wing Flaps 10° - FULL	65 KIAS

MANEUVERING SPEED

2550 POUNDS	105 KIAS
2200 POUNDS	98 KIAS
1900 POUNDS	90 KIAS

MAXIMUM GLIDE . . . . . 68 KIAS

PRECAUTIONARY LANDING WITH ENGINE POWER . 65 KIAS

LANDING WITHOUT ENGINE POWER

Wing Flaps UP	70 KIAS
Wing Flaps 10° - FULL	65 KIAS

EMERGENCY PROCEDURES

Procedures in the Emergency Procedures Checklist portion of this section shown in **bold faced** type are immediate action items which should be committed to memory.

ENGINE FAILURES

ENGINE FAILURE DURING TAKEOFF ROLL

1. **Throttle Control - IDLE (pull full out)**
2. **Brakes- APPLY**
3. Wing Flaps - RETRACT
4. Mixture Control - IDLE CUTOFF (pull full out)
5. MAGNETOS Switch - OFF
6. STBY BATT Switch - OFF
7. MASTER Switch (ALT and BAT) - OFF

ENGINE FAILURE IMMEDIATELY AFTER TAKEOFF

1. **Airspeed - 70 KIAS Flaps UP**
   65 KIAS Flaps 10° - FULL
2. Mixture Control - IDLE CUTOFF (pull full out)
3. FUEL SHUTOFF Valve - OFF (pull full out)
4. MAGNETOS Switch - OFF
5. Wing Flaps - AS REQUIRED (FULL recommended)
6. STBY BATT Switch - OFF
7. MASTER Switch (ALT and BAT) - OFF
8. Cabin Door - UNLATCH
9. Land - STRAIGHT AHEAD

ENGINE FAILURE DURING FLIGHT (Restart Procedures)

1. **Airspeed - 68 KIAS (best glide speed)**
2. **FUEL SHUTOFF Valve - ON (push full in)**
3. **FUEL SELECTOR Valve - BOTH**
4. **FUEL PUMP Switch - ON**
5. **Mixture Control - RICH (if restart has not occurred)**

(Continued Next Page)

ENGINE FAILURES (Continued)

ENGINE FAILURE DURING FLIGHT (Restart Procedures) (Continued)

6. MAGNETOS Switch - BOTH (or START if propeller is stopped)

NOTE

If the propeller is windmilling, engine will restart automatically within a few seconds. If propeller has stopped (possible at low speeds), turn MAGNETOS switch to START, advance throttle slowly from idle and lean the mixture from full rich as required to obtain smooth operation.

7. FUEL PUMP Switch - OFF

NOTE

If the indicated fuel flow (FFLOW GPH) immediately drops to zero, a sign of failure of the engine-driven fuel pump, return the FUEL PUMP switch to the ON position.

FORCED LANDINGS

EMERGENCY LANDING WITHOUT ENGINE POWER

1. Pilot and Passenger Seat Backs - MOST UPRIGHT POSITION
2. Seats and Seat Belts - SECURE
3. Airspeed - 70 KIAS - Flaps UP
   65 KIAS - Flaps 10° - FULL
4. Mixture Control - IDLE CUTOFF (pull full out)
5. FUEL SHUTOFF Valve - OFF (pull full out)
6. MAGNETOS Switch - OFF
7. Wing Flaps - AS REQUIRED (FULL recommended)
8. STBY BATT Switch - OFF
9. MASTER Switch (ALT and BAT) - OFF (when landing is assured)
10. Doors - UNLATCH PRIOR TO TOUCHDOWN
11. Touchdown - SLIGHTLY TAIL LOW
12. Brakes - APPLY HEAVILY

(Continued Next Page)

FORCED LANDINGS (Continued)

PRECAUTIONARY LANDING WITH ENGINE POWER

1. Pilot and Passenger Seat Backs - MOST UPRIGHT POSITION
2. Seats and Seat Belts - SECURE
3. Airspeed - 65 KIAS
4. Wing Flaps - 20°
5. Selected Field - FLY OVER, noting terrain and obstructions.
6. Wing Flaps - FULL (on final approach)
7. Airspeed - 65 KIAS
8. STBY BATT Switch - OFF
9. MASTER Switch (ALT and BAT) - OFF (when landing assured)
10. Doors - UNLATCH PRIOR TO TOUCHDOWN
11. Touchdown - SLIGHTLY TAIL LOW
12. Mixture Control - IDLE CUTOFF (pull full out)
13. MAGNETOS Switch - OFF
14. Brakes - APPLY HEAVILY

DITCHING

1. Radio - TRANSMIT MAYDAY on 121.5 MHz, (Give location, intentions and SQUAWK 7700)
2. Heavy Objects (in baggage area) - SECURE OR JETTISON (if possible)
3. Pilot and Passenger Seat Backs - MOST UPRIGHT POSITION
4. Seats and Seat Belts - SECURE
5. Wing Flaps - 20° - FULL
6. Power - ESTABLISH 300 FT/MIN DESCENT AT 55 KIAS

NOTE

If no power is available, approach at 70 KIAS with Flaps UP or at 65 KIAS with Flaps 10°.

7. Approach - High Winds, Heavy Seas - INTO THE WIND
   Light Winds, Heavy Swells - PARALLEL TO SWELLS
8. Cabin Doors - UNLATCH
9. Touchdown - LEVEL ATTITUDE AT ESTABLISHED RATE-OF-DESCENT.

(Continued Next Page)

FORCED LANDINGS (Continued)

DITCHING (Continued)

10. Face - CUSHION at touchdown with folded coat.
11. ELT - ACTIVATE
12. Airplane - EVACUATE THROUGH CABIN DOORS. If necessary, open window and flood cabin to equalize pressure so doors can be opened.
13. Life Vests and Raft - INFLATE WHEN CLEAR OF AIRPLANE.

FIRES

DURING START ON GROUND

1. **MAGNETOS Switch - START** (continue cranking to start the engine).

IF ENGINE STARTS

2. Power - 1800 RPM for a few minutes.
3. Engine - SHUTDOWN and inspect for damage.

IF ENGINE FAILS TO START

2. **Throttle Control - FULL (push full in)**
3. **Mixture Control - IDLE CUTOFF (pull full out)**
4. **MAGNETOS Switch - START (continue cranking)**
5. **FUEL SHUTOFF Valve - OFF (pull full out)**
6. **FUEL PUMP Switch - OFF**
7. **MAGNETOS Switch - OFF**
8. **STBY BATT Switch - OFF**
9. **MASTER Switch (ALT and BAT) - OFF**
10. Engine - SECURE
11. Parking Brake - RELEASE
12. Fire Extinguisher - OBTAIN (have ground attendants obtain if not installed)
13. Airplane - EVACUATE
14. Fire - EXTINGUISH using fire extinguisher, wool blanket, or dirt.
15. Fire Damage - INSPECT, (Repair or replace damaged components and/or wiring before conducting another flight)

(Continued Next Page)

FIRES (Continued)

ENGINE FIRE IN FLIGHT

1. **Mixture Control - IDLE CUTOFF (pull full out)**
2. **FUEL SHUTOFF Valve - OFF (pull full out)**
3. **FUEL PUMP Switch - OFF**
4. **MASTER Switch (ALT and BAT) - OFF**
5. Cabin Heat and Air - OFF (except overhead vents)
6. Airspeed - 100 KIAS (If fire is not extinguished, increase glide speed to find an airspeed, within airspeed limitations, which will provide an incombustible mixture)
7. Forced Landing - EXECUTE Refer to EMERGENCY LANDING WITHOUT ENGINE POWER

ELECTRICAL FIRE IN FLIGHT

1. **STBY BATT Switch - OFF**
2. **MASTER Switch (ALT and BAT) - OFF**
3. **Vents/Cabin Air/Heat - CLOSED**
4. **Fire Extinguisher - ACTIVATE (if available)**
5. AVIONICS Switch (BUS 1 and BUS 2) - OFF
6. All Other Switches (except MAGNETOS switch) - OFF

WARNING

AFTER THE FIRE EXTINGUISHER HAS BEEN USED, MAKE SURE THAT THE FIRE IS EXTINGUISHED BEFORE EXTERIOR AIR IS USED TO REMOVE SMOKE FROM THE CABIN.

7. Vents/Cabin Air/Heat - OPEN (When sure that fire is completely extinguished)

(Continued Next Page)

FIRES (Continued)

ELECTRICAL FIRE IN FLIGHT (Continued)

IF FIRE HAS BEEN EXTINGUISHED AND ELECTRICAL POWER IS NECESSARY FOR CONTINUED FLIGHT TO NEAREST SUITABLE AIRPORT OR LANDING AREA

8. Circuit Breakers - CHECK for OPEN circuit(s), do not reset.
9. MASTER Switch (ALT and BAT) - ON
10. STBY BATT Switch - ON
11. AVIONICS Switch (BUS 1) - ON
12. AVIONICS Switch (BUS 2) - ON

CABIN FIRE

1. **STBY BATT Switch - OFF**
2. **MASTER Switch (ALT and BAT) - OFF**
3. **Vents/Cabin Air/Heat - CLOSED (to avoid drafts)**
4. **Fire Extinguisher - ACTIVATE (if available)**

WARNING

AFTER THE FIRE EXTINGUISHER HAS BEEN USED, MAKE SURE THAT THE FIRE IS EXTINGUISHED BEFORE EXTERIOR AIR IS USED TO REMOVE SMOKE FROM THE CABIN.

5. Vents/Cabin Air/Heat - OPEN (When sure that fire is completely extinguished)
6. Land the airplane as soon as possible to inspect for damage.

WING FIRE

1. **LAND and TAXI Light Switches - OFF**
2. **NAV Light Switch - OFF**
3. **STROBE Light Switch - OFF**
4. **PITOT HEAT Switch - OFF**

NOTE

Perform a sideslip to keep the flames away from the fuel tank and cabin. Land as soon as possible using flaps only as required for final approach and touchdown.

ICING

INADVERTENT ICING ENCOUNTER DURING FLIGHT

1. **PITOT HEAT Switch - ON**
2. **Turn back or change altitude** to obtain an outside air temperature that is less conducive to icing.
3. **Pull cabin heat control full out and open defroster outlets** to obtain maximum windshield defroster airflow. Adjust cabin air control to get maximum defroster heat and airflow.
4. Watch for signs of induction air filter icing. A loss of engine RPM could be caused by ice blocking the air intake filter. Adjust the throttle as necessary to hold engine RPM. Adjust mixture, as necessary, for any change in power settings.
5. Plan a landing at the nearest airport. With an extremely rapid ice build-up, select a suitable "off airport" landing site.
6. With an ice accumulation of 0.25 inch or more on the wing leading edges, be prepared for significantly higher power requirements, higher approach and stall speeds, and a longer landing roll.
7. Leave wing flaps retracted. With a severe ice build-up on the horizontal tail, the change in wing wake airflow direction caused by wing flap extension could result in a loss of elevator effectiveness.
8. Open left window and, if practical, scrape ice from a portion of the windshield for visibility in the landing approach.
9. Perform a landing approach using a forward slip, if necessary, for improved visibility.
10. Approach at 65 to 75 KIAS depending upon the amount of the ice accumulation.
11. Perform a landing in level attitude.
12. Missed approaches should be avoided whenever possible because of severely reduced climb capability.

(Continued Next Page)

ICING (Continued)

STATIC SOURCE BLOCKAGE (ERRONEOUS INSTRUMENT READING SUSPECTED)

1. **ALT STATIC AIR Valve - PULL ON**
2. CABIN HT and CABIN AIR Knobs - PULL ON
3. Vents - CLOSED
4. Airspeed - Refer to Section 5, Figure 5-1 (Sheet 2) Airspeed Calibration, Alternate Static Source correction chart.

EXCESSIVE FUEL VAPOR

FUEL FLOW STABILIZATION PROCEDURES

(If flow fluctuations of 1 GPH or more, or power surges occur.)

1. FUEL PUMP Switch - ON
2. Mixture Control - ADJUST (As necessary for smooth engine operation)
3. Fuel Selector Valve - SELECT OPPOSITE TANK (if vapor symptoms continue)
4. FUEL PUMP Switch - OFF (after fuel flow has stabilized)

ABNORMAL LANDINGS

LANDING WITH A FLAT MAIN TIRE

1. Approach - NORMAL
2. Wing Flaps - FULL
3. Touchdown - GOOD MAIN TIRE FIRST (Hold airplane off flat tire as long as possible with aileron control)
4. Directional Control - MAINTAIN (Using brake on good wheel as required)

LANDING WITH A FLAT NOSE TIRE

1. Approach - NORMAL
2. Wing Flaps - AS REQUIRED
   85 to 110 KIAS - Flaps Up - 10°
   Below 85 KIAS - Flaps 10° - FULL
3. Touchdown - ON MAINS (Hold nosewheel off the ground as long as possible)
4. When nosewheel touches down, maintain full up elevator as airplane slows to stop.

ELECTRICAL POWER SUPPLY SYSTEM MALFUNCTIONS

HIGH VOLTS ANNUNCIATOR COMES ON OR M BAT AMPS MORE THAN 40

1. MASTER Switch (ALT Only) - OFF
2. Electrical Load - REDUCE IMMEDIATELY as follows:
   a. AVIONICS Switch (BUS 1) - OFF
   b. PITOT HEAT - OFF
   c. BEACON Light - OFF
   d. LAND Light - OFF (Use as required for landing)
   e. TAXI Light - OFF
   f. NAV Lights - OFF
   g. STROBE Lights - OFF
   h. CABIN PWR 12V - OFF

NOTE

- The Main Battery supplies electrical power to the Main and Essential Buses until M BUS VOLTS decreases below 20 volts. When M BUS VOLTS falls below 20 volts, the Standby Battery System will automatically supply electrical power to the Essential Bus for at least 30 minutes.

- Select COM1 MIC and NAV1 on the audio panel and tune to the active frequency before setting AVIONICS BUS 2 to OFF. If COM2 MIC and NAV2 are selected when AVIONICS BUS 2 is set to off, the COM and NAV radios cannot be tuned.

(Continued Next Page)

ELECTRICAL POWER SUPPLY SYSTEM MALFUNCTIONS (Continued)

HIGH VOLTS ANNUNCIATOR COMES ON OR M BAT AMPS MORE THAN 40 (Continued)

i. COM1 and NAV1 - TUNE TO ACTIVE FREQUENCY

j. COM1 MIC and NAV1 - SELECT (COM2 MIC and NAV2 will be inoperative once AVIONICS BUS 2 is selected to OFF).

NOTE

When AVIONICS BUS 2 is set to OFF, the following items will not operate:

KAP 140 Autopilot	GMA 1347 Audio Panel
COMM 2	NAV 2
GTX 33 Transponder	GDU 1040 MFD

k. AVIONICS Switch (BUS 2) - OFF (KEEP ON if in clouds)

3. Land as soon as practical.

NOTE

Make sure a successful landing is possible before extending flaps. The flap motor is a large electrical load during operation.

(Continued Next Page)

ELECTRICAL POWER SUPPLY SYSTEM MALFUNCTIONS (Continued)

LOW VOLTS ANNUNCIATOR COMES ON BELOW 1000 RPM

1. Throttle Control - 1000 RPM
2. Low Voltage Annunciator (LOW VOLTS) - CHECK OFF

LOW VOLTS ANNUNCIATOR REMAINS ON AT 1000 RPM

3. Authorized maintenance personnel must do electrical system inspection prior to next flight.

LOW VOLTS ANNUNCIATOR COMES ON OR DOES NOT GO OFF AT HIGHER RPM

1. MASTER Switch (ALT Only) - OFF
2. Alternator Circuit Breaker (ALT FIELD) - CHECK IN
3. MASTER Switch (ALT and BAT) - ON
4. Low Voltage Annunciator (LOW VOLTS) - CHECK OFF
5. M BUS VOLTS - CHECK 27.5 V minimum
6. M BAT AMPS - CHECK CHARGING (+)

IF LOW VOLTS ANNUNCIATOR REMAINS ON

7. MASTER Switch (ALT Only) - OFF
8. Electrical Load - REDUCE IMMEDIATELY as follows:
   a. AVIONICS Switch (BUS 1) - OFF
   b. PITOT HEAT - OFF
   c. BEACON Light - OFF
   d. LAND Light - OFF (use as required for landing)
   e. TAXI Light - OFF
   f. NAV Lights - OFF
   g. STROBE Lights - OFF
   h. CABIN PWR 12V - OFF

(Continued Next Page)

ELECTRICAL POWER SUPPLY SYSTEM MALFUNCTIONS (Continued)

IF LOW VOLTS ANNUNCIATOR REMAINS ON (Continued)

NOTE

- The Main Battery supplies electrical power to the Main and Essential Buses until M BUS VOLTS decreases below 20 volts. When M BUS VOLTS falls below 20 volts, the Standby Battery System will automatically supply electrical power to the Essential Bus for at least 30 minutes.
- Select COM1 MIC and NAV1 on the audio panel and tune to the active frequency before setting AVIONICS BUS 2 to OFF. If COM2 MIC and NAV2 are selected when AVIONICS BUS 2 is set to OFF, the COM and NAV radios cannot be tuned.

i. COM1 and NAV1 - TUNE TO ACTIVE FREQUENCY

j. COM1 MIC and NAV1 - SELECT (COM2 MIC and NAV2 will be inoperative once AVIONICS BUS 2 is selected to OFF)

NOTE

When AVIONICS BUS 2 is set to OFF, the following items will not operate:

KAP 140 Autopilot	GMA 1347 Audio Panel
COMM 2	NAV 2
GTX 33 Transponder	GDU 1040 MFD

k. AVIONICS Switch (BUS 2) - OFF (KEEP ON if in clouds)

(Continued Next Page)

ELECTRICAL POWER SUPPLY SYSTEM MALFUNCTIONS (Continued)

IF LOW VOLTS ANNUNCIATOR REMAINS ON (Continued)

9. Land as soon as practical.

NOTE

Make sure a successful landing is possible before extending flaps. The flap motor is a large electrical load during operation.

AIR DATA SYSTEM FAILURE

RED X - PFD AIRSPEED INDICATOR

1. ADC/AHRS Circuit Breakers - CHECK IN (ESS BUS and AVN BUS 1). If open, reset (close) circuit breaker. If circuit breaker opens again, do not reset.
2. Standby Airspeed Indicator - USE FOR AIRSPEED INFORMATION.

RED X - PFD ALTITUDE INDICATOR

1. ADC/AHRS Circuit Breakers - CHECK IN (ESS BUS and AVN BUS 1). If open, reset (close) circuit breaker. If circuit breaker opens again, do not reset.
2. Standby Altimeter - CHECK current barometric pressure SET. USE FOR ALTITUDE INFORMATION.

ATTITUDE AND HEADING REFERENCE SYSTEM (AHRS) FAILURE

RED X - PFD ATTITUDE INDICATOR

1. ADC/AHRS Circuit Breakers - CHECK IN (ESS BUS and AVN BUS 1). If open, reset (close) circuit breaker. If circuit breaker opens again, do not reset.
2. Standby Attitude Indicator - USE FOR ATTITUDE INFORMATION.

RED X - HORIZONTAL SITUATION INDICATOR (HSI)

1. ADC/AHRS Circuit Breakers - CHECK IN (ESS BUS and AVN BUS 1). If open, reset (close) circuit breaker. If circuit breaker opens again, do not reset.
2. Non-Stabilized Magnetic Compass - USE FOR HEADING INFORMATION.

DISPLAY COOLING ADVISORY

PFD1 COOLING OR MFD1 COOLING ANNUNCIATOR(S)

1. Cabin Heat (CABIN HT) - REDUCE (minimum preferred)
2. Forward Avionics Fan - CHECK (feel for airflow from screen on glareshield)

IF FORWARD AVIONICS FAN HAS FAILED

3. STBY BATT Switch - OFF (unless needed for emergency power)

IF PFD1 COOLING OR MFD1 COOLING ANNUNCIATOR DOES NOT GO OFF WITHIN 3 MINUTES OR IF BOTH PFD1 COOLING AND MFD1 COOLING ANNUNCIATORS COME ON

3. STBY BATT Switch - OFF (land as soon as practical)

VACUUM SYSTEM FAILURE

LOW VACUUM ANNUNCIATOR COMES ON

1. **Vacuum Indicator (VAC) - CHECK** EIS ENGINE page to make sure vacuum pointer is in green arc limits.

CAUTION

IF VACUUM POINTER IS OUT OF THE GREEN ARC DURING FLIGHT OR THE GYRO FLAG IS SHOWN ON THE STANDBY ATTITUDE INDICATOR, THE STANDBY ATTITUDE INDICATOR MUST NOT BE USED FOR ATTITUDE INFORMATION.

HIGH CARBON MONOXIDE (CO) LEVEL ANNUNCIATOR (if installed)

CO LVL HIGH ANNUNCIATOR COMES ON

1. **CABIN HT Knob - OFF (push full in)**
2. **CABIN AIR Knob - ON (pull full out)**
3. **Cabin Vents - OPEN**
4. Cabin Windows - OPEN (163 KIAS maximum windows open speed)

CO LVL HIGH ANNUNCIATOR REMAINS ON

5. Land as soon as practical.

AMPLIFIED EMERGENCY PROCEDURES

The following Amplified Emergency Procedures provide additional information beyond that in the Emergency Procedures Checklists portion of this section. These procedures also include information not readily adaptable to a checklist format, and material to which a pilot could not be expected to refer in resolution of a specific emergency. This information should be reviewed in detail prior to flying the airplane, as well as reviewed on a regular basis to keep pilot's knowledge of procedures fresh.

ENGINE FAILURE

If an engine failure occurs during the takeoff roll, stop the airplane on the remaining runway. Those extra items on the checklist will provide added safety after a failure of this type.

If an engine failure occurs immediately after takeoff, in most cases, the landing should be planned straight ahead with only small changes in direction to avoid obstructions. Altitude and airspeed are seldom sufficient to execute the 180° gliding turn necessary to return to the runway. The checklist procedures assume that adequate time exists to secure the fuel and ignition systems prior to touchdown.

After an engine failure in flight, the most important task is to continue flying the airplane. The best glide speed, as shown in Figure 3-1, should be established as quickly as possible. While gliding toward a suitable landing area, an effort should be made to identify the cause of the failure. If time permits, an engine restart should be attempted as shown in the checklist. If the engine cannot be restarted, a forced landing without power must be completed.

MAXIMUM GLIDE

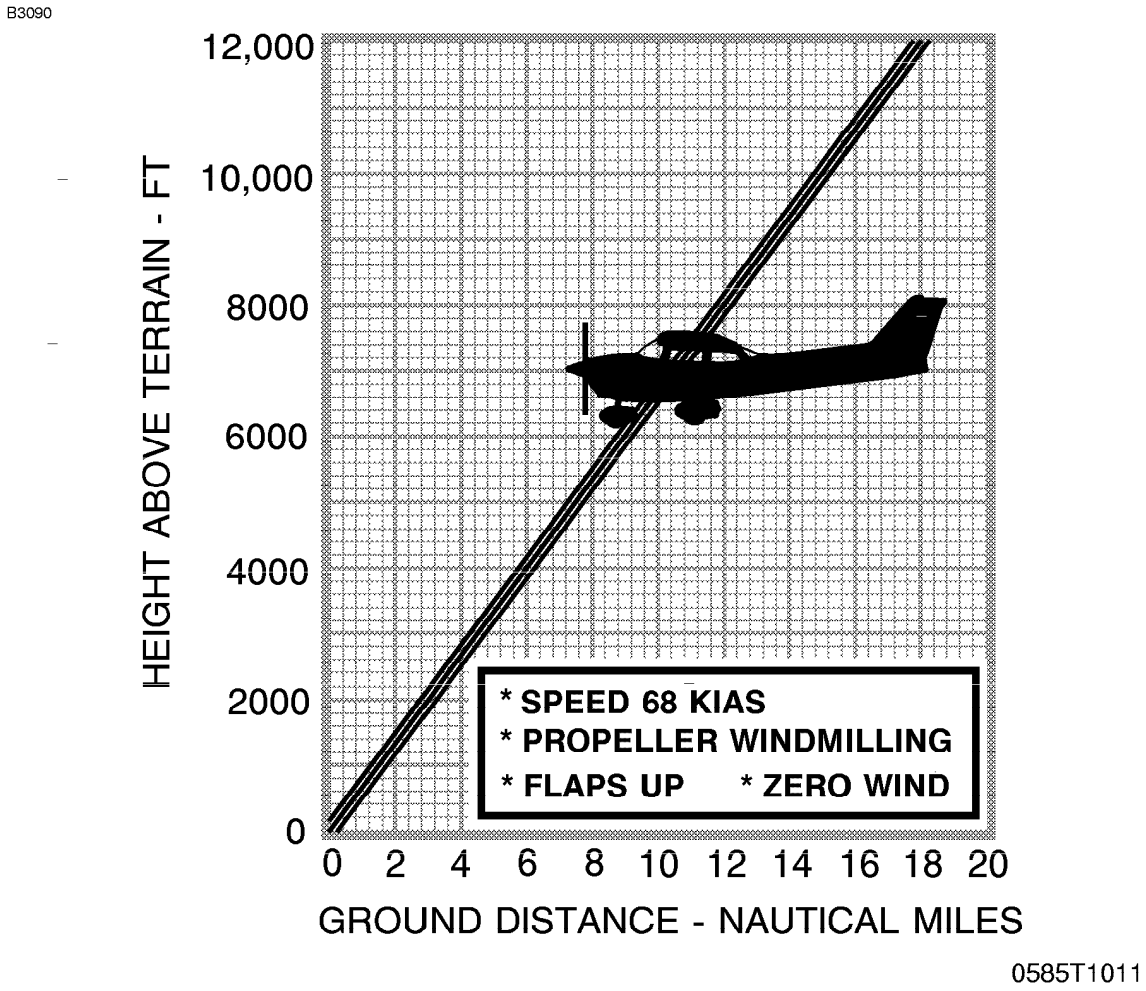

Figure 3-1

FORCED LANDINGS

If all attempts to restart the engine fail and a forced landing is imminent, select a suitable field and prepare for the landing as discussed under the Emergency Landing Without Engine Power checklist. Transmit Mayday message on 121.5 MHz giving location and intentions and squawk 7700.

Before attempting an "off airport" landing with engine power available, one should fly over the landing area at a safe but low altitude to inspect the terrain for obstructions and surface conditions, proceeding as discussed in the Precautionary Landing With Engine Power checklist.

Prepare for ditching by securing or jettisoning heavy objects located in the baggage area and collect folded coats for protection of occupants' face at touchdown. Transmit Mayday messages on 121.5 MHz giving location and intentions and squawk 7700. Avoid a landing flare because of the difficulty in judging height over a water surface. The checklist assumes the availability of power to make a precautionary water landing. If power is not available, use of the airspeeds noted with minimum flap extension will provide a more favorable attitude for a power off ditching.

For a forced landing situation, set the STBY BATT Switch to the off position. Do not set the AVIONICS (BUS 1 and BUS 2) Switch or the MASTER Switch (ALT and BAT) to the OFF position until a landing is assured. When these switches are in the OFF position, the airplane electrical systems are de-energized.

Before performing a forced landing, especially in remote and mountainous areas, activate the ELT transmitter by positioning the cockpit-mounted switch to the ON position. For complete information on ELT operation, refer to the Supplements, Section 9.

LANDING WITHOUT ELEVATOR CONTROL

Trim for horizontal flight with an airspeed of approximately 65 KIAS and flaps set to 20° by using throttle and elevator trim controls. Then **do not change the elevator trim control setting**; control the glide angle by adjusting power.

During the landing flare (round-out), the nose will come down when power is reduced and the airplane may touch down on the nosewheel before the main wheels. When in the flare, the elevator trim control should be adjusted toward the full nose up position and the power adjusted at the same time so that the airplane will rotate to a horizontal attitude for touchdown. Close the throttle at touchdown.

FIRES

Improper starting procedures involving the excessive use of auxiliary fuel pump operation can cause engine flooding and subsequent collection of fuel on the parking ramp as the excess fuel drains overboard from the intake manifolds. This is sometimes experienced in difficult starts in cold weather where engine preheat service is not available. If this occurs, the airplane should be pushed away from the fuel puddle before another engine start is attempted. Otherwise, there is a possibility of raw fuel accumulations in the exhaust system igniting during an engine start, causing a long flame from the tailpipe, and possibly igniting the collected fuel on the pavement. If a fire occurs, proceed according to the checklist.

Although engine fires are extremely rare in flight, if a fire is encountered, the steps of the appropriate checklist should be followed. After completion of this procedure, execute a forced landing. Do not attempt to restart the engine.

The first sign of an electrical fire is usually the smell of burning insulation. The checklist procedure should result in the elimination of the fire.

EMERGENCY OPERATION IN CLOUDS

If the engine-driven vacuum pump fails in flight, the standby attitude indicator will not be accurate. The pilot must then rely on the attitude and heading information (from the AHRS) shown on the PFD indicators. With valid HDG or GPS/NAV and blind turn coordinator inputs, autopilot operation will not be affected.

If the AHRS unit fails in flight (red X's shown through the PFD attitude and heading indicators), the pilot must rely on the standby attitude indicator and non-stabilized magnetic compass for attitude and heading information.

The KAP 140 Autopilot will not operate in HDG mode without AHRS input. With a valid GPS or NAV input and an operating turn coordinator, the autopilot will operate in NAV, APR or REV modes. Autopilot altitude hold and vertical speed operating modes are independent of AHRS operation. Refer to Section 9, Supplements, for additional details on autopilot operations.

The following instructions assume that the pilot is not very proficient at instrument flying and is flying the airplane without the autopilot engaged.

(Continued Next Page)

EMERGENCY OPERATION IN CLOUDS (Continued)

EXECUTING A 180° TURN IN CLOUDS (AHRS FAILED)

Upon inadvertently entering the clouds, an immediate turn to reverse course and return to VFR conditions should be made as follows:

AHRS Failure

1. Note the non-stabilized magnetic compass heading.
2. Using the standby attitude indicator, initiate a 15° bank left turn. Keep feet off rudder pedals. Maintain altitude and 15° bank angle. Continue the turn for 60 seconds, then roll back to level flight.
3. When the compass card becomes sufficiently stable, check the accuracy of the turn by verifying that the compass heading approximates the reciprocal of the original heading.
4. If necessary, adjust the heading by keeping the wings level and using the rudder to make skidding turns (the compass will read more accurately) to complete the course reversal.
5. Maintain altitude and airspeed by cautious application of elevator control. Keep the roll pointer and index aligned and steer only with rudder.

(Continued Next Page)

EMERGENCY OPERATION IN CLOUDS (Continued)

EMERGENCY DESCENT THROUGH CLOUDS (AHRS FAILED)

When returning to VFR flight after a 180° turn is not practical, a descent through the clouds to VFR conditions below may be appropriate. If possible, obtain an ATC clearance for an emergency descent through the clouds.

AHRS Failure

Choose an easterly or westerly heading to minimize non-stabilized magnetic compass card sensitivity. Occasionally check the compass heading and make minor corrections to hold an approximate course. The autopilot may be engaged in ROL mode to keep the wings level and VS mode to control rate-of-descent.

Before descending into the clouds, prepare for a stabilized descent as follows:

1. Apply full rich mixture.
2. Turn pitot heat on.
3. Set power for a 500 to 800 feet per minute rate-of-descent.
4. Set the elevator trim for a stabilized descent at 80 KIAS.
5. Use the standby attitude indicator roll pointer and index to keep wings level.
6. Check trend of compass card movement and make cautious corrections with rudder to stop the turn.
7. Upon breaking out of clouds, resume normal cruising flight.

(Continued Next Page)

EMERGENCY OPERATION IN CLOUDS (Continued)

RECOVERY FROM SPIRAL DIVE IN THE CLOUDS (AHRS FAILED)

AHRS Failure

If a spiral is entered while in the clouds, continue as follows:

1. Retard throttle to idle position.
2. Remove feet from rudder pedals.
3. Stop turn by carefully leveling the wings using aileron control to align the roll index and roll pointer of the standby attitude indicator.
4. Cautiously apply elevator back pressure to slowly reduce the airspeed to 80 KIAS.
5. Adjust the elevator trim control to maintain an 80 KIAS glide.
6. Use aileron control to maintain wings level (keep roll pointer and index aligned) and constant heading.
7. Resume EMERGENCY DESCENT THROUGH THE CLOUDS procedure.
8. Upon breaking out of clouds, resume normal cruising flight.

INADVERTENT FLIGHT INTO ICING CONDITIONS

Flight into icing conditions is prohibited and extremely dangerous. An inadvertent encounter with these conditions can be resolved using the checklist procedures. The best action is to turn back or change altitude to escape icing conditions. Set the PITOT HEAT switch to the ON position until safely out of icing conditions.

During these encounters, an unexplained loss in engine power could be caused by ice blocking the air intake filter or in extremely rare instances ice completely blocking the fuel injection air reference tubes. In either case, the throttle should be positioned to obtain maximum RPM (in some instances, the throttle may need to be retarded for maximum power). The mixture should then be adjusted, as required, to obtain maximum RPM.

STATIC SOURCE BLOCKED

If erroneous readings of the static source instruments (airspeed, altimeter and vertical speed) are suspected, the ALT STATIC AIR valve should be pulled ON, thereby supplying static pressure to these instruments from the cabin.

When the ALT STATIC AIR valve is ON, the maximum airspeed variation from normal static source operation is 11 knots and the maximum altimeter variation is less than 50 feet (all windows closed). Refer to Section 5, Airspeed Calibration and Altimeter Correction tables for Alternate Static Source for additional details.

SPINS

Should an inadvertent spin occur, the following recovery procedure should be used:

1. RETARD THROTTLE TO IDLE POSITION.
2. PLACE AILERONS IN NEUTRAL POSITION.
3. APPLY AND **HOLD** FULL RUDDER OPPOSITE TO THE DIRECTION OF ROTATION.
4. JUST **AFTER** THE RUDDER REACHES THE STOP, MOVE THE CONTROL WHEEL **BRISKLY** FORWARD FAR ENOUGH TO BREAK THE STALL. Full down elevator may be required at aft center-of-gravity loadings to assure optimum recoveries.
5. **HOLD** THESE CONTROL INPUTS UNTIL ROTATION STOPS. Premature relaxation of the control inputs may extend the recovery.
6. AS ROTATION STOPS, NEUTRALIZE RUDDER, AND MAKE A SMOOTH RECOVERY FROM THE RESULTING DIVE.

NOTE

If the rate of the spin makes determining the direction of rotation difficult, the magenta turn rate indicator at the top of the HSI compass card will show the rate and direction of the turn. The HSI compass card will rotate in the opposite direction. Hold opposite rudder to the turn vector direction.

For additional information on spins and spin recovery, see the discussion under SPINS in Normal Procedures (Section 4).

ROUGH ENGINE OPERATION OR LOSS OF POWER

SPARK PLUG FOULING

A slight engine roughness in flight may be caused by one or more spark plugs becoming fouled by carbon or lead deposits. This may be verified by turning the MAGNETOS switch momentarily from BOTH to either L or R position. An obvious power loss in single ignition operation is evidence of spark plug or magneto trouble. Since spark plugs are the more likely cause, lean the mixture to the recommended lean setting for cruising flight. If the problem does not clear up in several minutes, determine if a richer mixture setting will produce smoother operation. If not, proceed to the nearest airport for repairs using the BOTH position of the MAGNETOS switch unless extreme roughness makes the use of a single magneto position necessary.

MAGNETO MALFUNCTION

Sudden engine roughness or misfiring is usually a sign of a magneto problem. Changing the MAGNETOS switch from BOTH to the L and R switch positions will identify which magneto is malfunctioning. Select different power settings and enrichen the mixture to determine if continued operation on BOTH magnetos is possible. If not, change to the good magneto and continue to the nearest airport for repairs.

IDLE POWER ENGINE ROUGHNESS (As Required by AD 2001-06-17, Paragraph (d)(3))

An excessively rich idle fuel flow may cause low speed engine roughness during flight. During most in-flight low engine speeds (power off stalls, approach to landing, etc.), the mixture control is normally in the full-rich position. However, to improve engine roughness (caused by an improperly adjusted fuel servo) during low engine speeds while in flight, you should rotate the vernier mixture control (leaning of fuel mixture). You may also have to lean the fuel mixture if this low engine speed results in power loss and you need to restart the engine during flight. In all cases, you should land the airplane at the nearest airport for repairs if low speed engine roughness requires you to adjust the fuel mixture control to improve engine operation.

(Continued Next Page)

ROUGH ENGINE OPERATION OR LOSS OF POWER (Continued)

ENGINE-DRIVEN FUEL PUMP FAILURE

Failure of the engine-driven fuel pump will be shown by a sudden reduction in the fuel flow indication (FFLOW GPH) **immediately before a loss of power** while operating from a fuel tank containing adequate fuel.

If the engine-driven fuel pump fails, immediately set the FUEL PUMP switch to the ON position to restore engine power. The flight should be terminated as soon as practical and the engine-driven fuel pump repaired.

EXCESSIVE FUEL VAPOR

Fuel vapor in the fuel injection system is most likely to occur on the ground, typically during prolonged taxi operations, when operating at higher altitudes and/or in unusually warm temperatures.

Excessive fuel vapor accumulation is shown by fuel flow indicator (FFLOW GPH) fluctuations greater than 1 gal./hr. This condition, with leaner mixtures or with larger fluctuations, can result in power surges, and if not corrected, may cause power loss.

To slow vapor formation and stabilize fuel flow on the ground or in the air, set the FUEL PUMP switch to the ON position and adjust the mixture as required for smooth engine operation. If vapor symptoms continue, select the opposite fuel tank. When fuel flow stabilizes, set the FUEL PUMP switch to the OFF position and adjust the mixture as desired.

LOW OIL PRESSURE

If the low oil pressure annunciator (OIL PRESS) comes on, check the oil pressure indicator (OIL PRES on ENGINE page or OIL PSI on SYSTEM page) to confirm low oil pressure condition. If oil pressure and oil temperature (OIL TEMP on ENGINE page or OIL °F on SYSTEM page) remain normal, it is possible that the oil pressure sending unit or relief valve is malfunctioning. Land at the nearest airport to determine the source of the problem.

(Continued Next Page)

ROUGH ENGINE OPERATION OR LOSS OF POWER (Continued)

LOW OIL PRESSURE (Continued)

If a total loss of oil pressure and a rise in oil temperature occur at about the same time, it could mean that the engine is about to fail. Reduce power immediately and select a field suitable for a forced landing. Use only the minimum power necessary to reach the landing site.

ELECTRICAL POWER SUPPLY SYSTEM MALFUNCTIONS

Malfunctions in the electrical power supply system can be detected through regular monitoring of the main battery ammeter (M BAT AMPS) and the main electrical bus voltmeter (M BUS VOLTS); however, the cause of these malfunctions is usually difficult to determine. A broken alternator drive belt, too much wear on the alternator brushes, or an error in wiring is most likely the cause of alternator failures, although other factors could cause the problem. A defective alternator control unit (ACU) can also cause malfunctions. Problems of this nature constitute an electrical emergency and should be dealt with immediately. Electrical power malfunctions usually fall into two categories: excessive rate-of-charge and insufficient rate-of-charge. The following paragraphs describe the recommended remedy for each situation.

EXCESSIVE RATE-OF-CHARGE

After engine starting and heavy electrical usage at low engine speeds (such as extended taxiing) the battery condition will be low enough to accept above normal charging during the initial part of a flight. However, after thirty minutes of cruising flight, the main battery ammeter (M BAT AMPS) should be indicating less than 5 amps of charging (+) current. If the charging current remains above this value on a long flight, the battery electrolyte could overheat and evaporate.

(Continued Next Page)

ELECTRICAL POWER SUPPLY SYSTEM MALFUNCTIONS (Continued)

EXCESSIVE RATE-OF-CHARGE (Continued)

Electronic components in the electrical system can be adversely affected by higher than normal voltage. The alternator control unit includes an overvoltage sensor circuit which will automatically disconnect the alternator if the charge voltage increases to more than approximately 31.75 volts. If the overvoltage sensor circuit does not operate correctly, as shown by voltage more than 31.75 volts on the main battery bus voltmeter, the MASTER switch ALT section should be set to the OFF position. Unnecessary electrical equipment should be de-energized and the flight terminated as soon as practical.

INSUFFICIENT RATE-OF-CHARGE

When the over-voltage sensor circuit, or other fault, opens the alternator (ALT FIELD) circuit breaker and de-energizes the alternator, a discharge (-) current will be shown on the main battery ammeter and the low voltage annunciator (LOW VOLTS) will come on. The ACU can de-energize the alternator due to minor disturbances in the electrical system, resulting in a "nuisance" opening of the ALT FIELD circuit breaker. If this happens, an attempt should be made to energize the alternator system.

To energize the alternator system

1. MASTER Switch (ALT Only) - OFF.
2. Alternator Circuit Breaker (ALT FIELD) - CHECK IN.
3. MASTER Switch (ALT Only) - ON.

If the problem was a minor ACU disturbance in the electrical system, normal main battery charging will start. A charge (+) current will be shown on the main battery ammeter and the LOW VOLTS annunciator will go off.

If the LOW VOLTS annunciator comes on again, there is an alternator system problem. Do not repeat steps to energize the alternator system. The electrical load on the battery must be minimized (by de-energizing nonessential electrical equipment and avionics) because the battery can supply the electrical system for only a short time. Reduce electrical load as soon as possible to extend the life of the battery for landing. Land as soon as practical.

(Continued Next Page)

ELECTRICAL POWER SUPPLY SYSTEM MALFUNCTIONS (Continued)

INSUFFICIENT RATE-OF-CHARGE (Continued)

Main battery life can be extended by setting the MASTER switch (ALT and BAT) to OFF and operating the equipment on the ESS BUS from the standby battery. The standby battery is only capable of providing power for systems on the Essential Bus and cannot provide power for transponder (XPDR) operation. Main battery life should be extended, when practical, for possible later operation of the wing flaps and use of the landing light (at night).

NOTE

The LOW VOLTS annunciator can come on when the engine is operated at low RPM with a high electrical load. The LOW VOLTS annunciator will usually go off when the engine is operated at higher RPM for greater alternator system output. Make sure that the M BATT AMPS indication shows positive (+) current at the higher RPM.

HIGH CARBON MONOXIDE (CO) LEVEL ANNUNCIATION (if installed)

Carbon monoxide (CO) is a colorless, odorless, tasteless product of an internal combustion engine and is always present in exhaust fumes. Even minute quantities of carbon monoxide breathed over long period of time may lead to dire consequences. The symptoms of carbon monoxide poisoning are difficult to detect by the person affected and may include blurred thinking, a feeling of uneasiness, dizziness, headache, and loss of consciousness.

The cabin heater system operates by allowing ambient air to flow through an exhaust shroud where it is heated before being ducted into the cabin. If an exhaust leak, caused by a crack in the exhaust pipe, occurs in the area surrounded by this shroud it would allow exhaust fumes to mix with the heated ambient air being ducted into the cabin. Therefore, if anyone in the cabin smells exhaust fumes, experiences any of the symptoms mentioned above, or the CO LVL HIGH warning annunciation comes on when using the cabin heater, immediately turn off the cabin heater and preform the emergency items for HIGH CARBON MONOXIDE (CO) LEVEL.

When the CO detection system senses a CO level of 50 parts per million (PPM) by volume or greater the alarm turns on a flashing warning annunciation CO LVL HIGH in the annunciation window on the PFD with a continuous tone until the PFD softkey below WARNING is pushed. It then remains on steady until the CO level drops below 50 PPM and automatically resets the alarm.

OTHER EMERGENCIES

WINDSHIELD DAMAGE

If a bird strike or other incident should damage the windshield in flight to the point of creating an opening, a significant loss in performance may be expected. This loss may be minimized in some cases (depending on amount of damage, altitude, etc.) by opening the side windows while the airplane is maneuvered for a landing at the nearest airport. If airplane performance or other adverse conditions prevent landing at an airport, prepare for an "off airport" landing in accordance with the Precautionary Landing With Engine Power or Ditching checklists.

NORMAL PROCEDURES

TABLE OF CONTENTS

	Page
Introduction	4-5
AIRSPEEDS	4-5
Airspeeds For Normal Operation	4-5
NORMAL PROCEDURES	4-6
Preflight Inspection	4-6
Cabin	4-7
Empennage	4-8
Right Wing Trailing Edge	4-8
Right Wing	4-9
Nose	4-10
Left Wing Leading Edge	4-11
Left Wing	4-11
Left Wing Trailing Edge	4-12
Before Starting Engine	4-12
Starting Engine (With Battery)	4-12
Starting Engine (With External Power)	4-14
Before Takeoff	4-16
Takeoff	4-19
Normal Takeoff	4-19
Short Field Takeoff	4-19
Enroute Climb	4-19
Cruise	4-20
Descent	4-20
Before Landing	4-22

(Continued Next Page)

TABLE OF CONTENTS (Continued)

Page

NORMAL PROCEDURES (Continued)

Landing 4-22
Normal Landing 4-22
Short Field Landing 4-22
Balked Landing 4-23
After Landing 4-23
Securing Airplane 4-23

AMPLIFIED PROCEDURES 4-24
Preflight Inspection 4-24
Starting Engine 4-25
Recommended Starter Duty Cycle 4-26
Leaning For Ground Operations 4-27
Taxiing 4-27
Before Takeoff 4-29
Warm Up 4-29
Magneto Check 4-29
Alternator Check 4-29
Elevator Trim 4-30
Landing Lights 4-30
Takeoff 4-30
Power Check 4-30
Wing Flap Settings 4-31
Crosswind Takeoff 4-31
Enroute Climb 4-32
Cruise 4-32
Leaning Using Exhaust Gas Temperature (EGT) 4-34
Fuel Savings Procedures for Flight Training Operations . . 4-37
Fuel Vapor Procedures 4-38

(Continued Next Page)

TABLE OF CONTENTS (Continued)

Page

AMPLIFIED PROCEDURES (Continued)

Stalls 4-39
Spins 4-39
Holding, Procedure Turns and Missed Approaches 4-42
Landing 4-46
Normal Landing 4-46
Short Field Landing 4-46
Crosswind Landing 4-47
Balked Landing 4-47
Cold Weather Operation 4-48
Starting 4-48
Winterization Kit 4-49
Hot Weather Operation 4-50
Noise Characteristics And Noise Reduction 4-50

INTRODUCTION

Section 4 provides procedures and amplified instructions for normal operations using standard equipment. Normal procedures associated with optional systems can be found in Section 9, Supplements.

AIRSPEEDS

AIRSPEEDS FOR NORMAL OPERATION

Unless otherwise noted, the following speeds are based on a maximum weight of 2550 pounds and may be used for any lesser weight.

TAKEOFF:

Normal Climb Out	75 - 85 KIAS
Short Field Takeoff, Flaps 10°, Speed at 50 Feet	56 KIAS

ENROUTE CLIMB, FLAPS UP:

Normal, Sea Level	75 - 85 KIAS
Normal, 10,000 Feet	70 - 80 KIAS
Best Rate-of-Climb, Sea Level	74 KIAS
Best Rate-of-Climb, 10,000 Feet	72 KIAS
Best Angle-of-Climb, Sea Level	62 KIAS
Best Angle-of-Climb, 10,000 Feet	67 KIAS

LANDING APPROACH:

Normal Approach, Flaps UP	65 - 75 KIAS
Normal Approach, Flaps FULL	60 - 70 KIAS
Short Field Approach, Flaps FULL	61 KIAS

BALKED LANDING:

Maximum Power, Flaps 20°	60 KIAS

MAXIMUM RECOMMENDED TURBULENT AIR PENETRATION SPEED:

2550 POUNDS	105 KIAS
2200 POUNDS	98 KIAS
1900 POUNDS	90 KIAS

MAXIMUM DEMONSTRATED CROSSWIND VELOCITY:

Takeoff or Landing	15 KNOTS

NORMAL PROCEDURES

PREFLIGHT INSPECTION

B3091

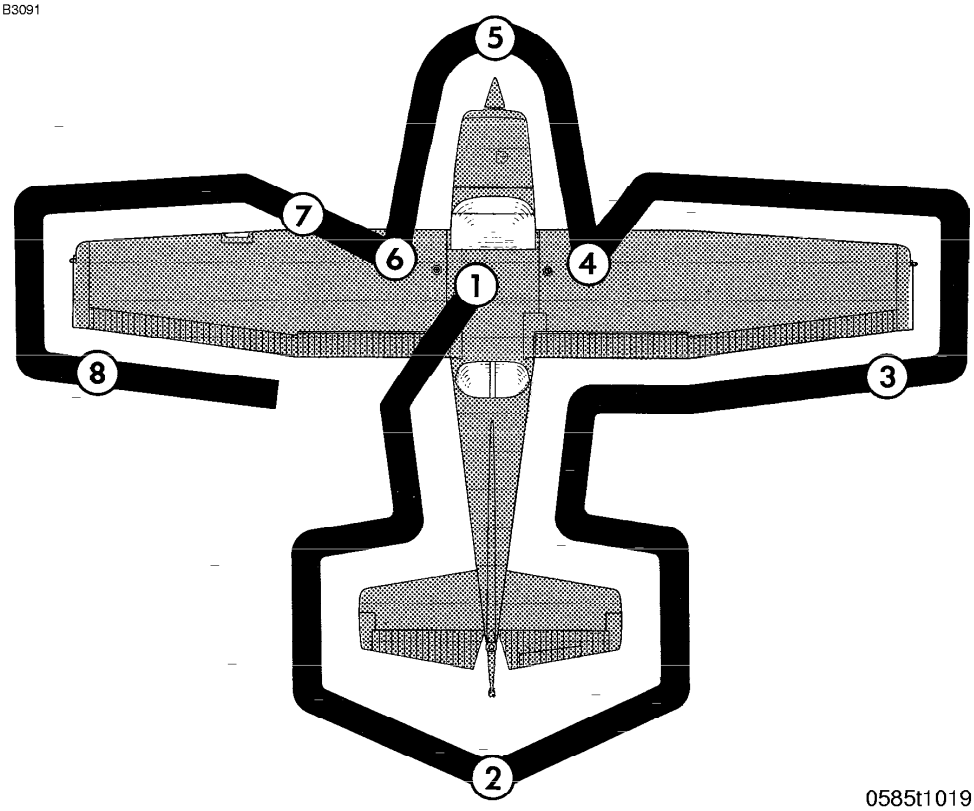

0585t1019

NOTE

Visually check airplane for general condition during walk-around inspection. Airplane should be parked in a normal ground attitude (refer to Figure 1-1) to make sure that fuel drain valves allow for accurate sampling. Use of the refueling steps and assist handles will simplify access to the upper wing surfaces for visual checks and refueling operations. In cold weather, remove even small accumulations of frost, ice or snow from wing, tail and control surfaces. Also, make sure that control surfaces contain no internal accumulations of ice or debris. Prior to flight, check that pitot heater is warm to touch within 30 seconds with battery and pitot heat switches on. If a night flight is planned, check operation of all lights, and make sure a flashlight is available.

Figure 4-1

PREFLIGHT INSPECTION (Continued)

(1) CABIN

1. Pitot Tube Cover - REMOVE (Check for pitot blockage)
2. Pilot's Operating Handbook - ACCESSIBLE TO PILOT
3. Garmin G1000™ Cockpit Reference Guide - ACCESSIBLE TO PILOT
4. Airplane Weight and Balance - CHECKED
5. Parking Brake - SET
6. Control Wheel Lock - REMOVE

WARNING

WHEN THE MASTER SWITCH IS ON, USING AN EXTERNAL POWER SOURCE, OR MANUALLY ROTATING THE PROPELLER, TREAT THE PROPELLER AS IF THE MAGNETOS SWITCH WERE ON. DO NOT STAND, NOR ALLOW ANYONE ELSE TO STAND, WITHIN THE ARC OF THE PROPELLER SINCE A LOOSE OR BROKEN WIRE, OR A COMPONENT MALFUNCTION, COULD CAUSE THE ENGINE TO START.

7. MAGNETOS Switch - OFF
8. AVIONICS Switch (BUS 1 and BUS 2) - OFF
9. MASTER Switch (ALT and BAT) - ON
10. Primary Flight Display (PFD) - CHECK (Verfiy PFD is ON)
11. FUEL QTY (L and R) - CHECK
12. LOW FUEL L and LOW FUEL R Annunciators - CHECK (Verify annunciators are not shown on PFD)
13. OIL PRESSURE Annunciator - CHECK (Verify annunciator is shown)
14. LOW VACUUM Annunciator - CHECK (Verify annunciator is shown)
15. AVIONICS Switch (BUS 1) - ON
16. Forward Avionics Fan - CHECK (Verify fan is heard)

(Continued Next Page)

PREFLIGHT INSPECTION (Continued)

(1) CABIN (Continued)

17. AVIONICS Switch (BUS 1) - OFF
18. AVIONICS Switch (BUS 2) - ON
19. Aft Avionics Fan - CHECK (Verify fan is heard)
20. AVIONICS Switch (BUS 2) - OFF
21. PITOT HEAT Switch - ON (Carefully check that pitot tube is warm to the touch within 30 seconds)
22. PITOT HEAT Switch - OFF
23. LOW VOLTS Annunciator - CHECK (Verify annunciator is shown)
24. MASTER Switch (ALT and BAT) - OFF
25. Elevator Trim Control - TAKEOFF position
26. FUEL SELECTOR Valve - BOTH
27. ALT STATIC AIR Valve - OFF (push full in)
28. Fire Extinguisher - CHECK (Verify gage pointer in green arc).

(2) EMPENNAGE

1. Baggage Door - CHECK (lock with key)
2. Autopilot Static Source (if installed) - CHECK (Verify opening is clear)
3. Rudder Gust Lock (if installed) - REMOVE
4. Tail Tiedown - DISCONNECT
5. Control Surfaces - CHECK freedom of movement and security
6. Elevator Trim Tab - CHECK security
7. Antennas - CHECK for security of attachment and general condition

(3) RIGHT WING Trailing Edge

1. Flap - CHECK for security and condition
2. Aileron - CHECK freedom of movement and security

(Continued Next Page)

PREFLIGHT INSPECTION (Continued)

(4) RIGHT WING

1. Wing Tiedown - DISCONNECT
2. Main Wheel Tire - CHECK for proper inflation and general condition (weather checks, tread depth and wear, etc.).
3. Fuel Tank Sump Quick Drain Valves - DRAIN

   Drain at least a cupful of fuel (using sampler cup) from each sump location to check for water, sediment, and proper fuel grade before each flight and after each refueling. If water is observed, take further samples until clear and then gently rock wings and lower tail to the ground to move any additional contaminants to the sampling points. Take repeated samples from **all** fuel drain points until **all** contamination has been removed. If contaminants are still present, refer to WARNING below and do not fly airplane.

NOTE

Collect all sampled fuel in a safe container. Dispose of the sampled fuel so that it does not cause a nuisance, hazard, or damage to the environment.

WARNING

IF, AFTER REPEATED SAMPLING, EVIDENCE OF CONTAMINATION STILL EXISTS, THE AIRPLANE SHOULD NOT BE FLOWN. TANKS SHOULD BE DRAINED AND SYSTEM PURGED BY QUALIFIED MAINTENANCE PERSONNEL. ALL EVIDENCE OF CONTAMINATION MUST BE REMOVED BEFORE FURTHER FLIGHT.

4. Fuel Quantity - CHECK VISUALLY for desired level
5. Fuel Filler Cap - SECURE and VENT CLEAR

(Continued Next Page)

PREFLIGHT INSPECTION (Continued)

(5) NOSE

1. Fuel Strainer Quick Drain Valve (Located on bottom of fuselage) - DRAIN

   Drain at least a cupful of fuel (using sampler cup) from valve to check for water, sediment, and proper fuel grade before each flight and after each refueling. If water is observed, take further samples until clear and then gently rock wings and lower tail to the ground to move any additional contaminants to the sampling points. Take repeated samples from **all** fuel drain points, including the fuel reservoir and fuel selector, until **all** contamination has been removed. If contaminants are still present, refer to WARNING below and do not fly the airplane.

   NOTE

   Collect all sampled fuel in a safe container. Dispose of the sampled fuel so that it does not cause a nuisance, hazard, or damage to the environment.

   WARNING

   IF, AFTER REPEATED SAMPLING, EVIDENCE OF CONTAMINATION STILL EXISTS, THE AIRPLANE SHOULD NOT BE FLOWN. TANKS SHOULD BE DRAINED AND SYSTEM PURGED BY QUALIFIED MAINTENANCE PERSONNEL. ALL EVIDENCE OF CONTAMINATION MUST BE REMOVED BEFORE FURTHER FLIGHT.

2. Engine Oil Dipstick/Filler Cap - CHECK oil level, then check dipstick/filler cap SECURE. **Do not operate with less than 5 quarts.** Fill to 8 quarts for extended flight.
3. Engine Cooling Air Inlets - CLEAR of obstructions.
4. Propeller and Spinner - CHECK for nicks and security.
5. Air Filter - CHECK for restrictions by dust or other foreign matter.
6. Nosewheel Strut and Tire - CHECK for proper inflation of strut and general condition of tire. (weather checks, tread depth and wear, etc.)
7. Static Source Opening - CHECK (Verify opening is clear)

(Continued Next Page)

PREFLIGHT INSPECTION (Continued)

(6) LEFT WING Leading Edge

1. Fuel Tank Vent Opening - CHECK for blockage
2. Stall Warning Opening - CHECK for blockage. To check the system, place a clean handkerchief over the vent opening and apply suction; a sound from the warning horn will confirm system operation.
3. Landing/Taxi Light(s) - CHECK for condition and cleanliness of cover.

(7) LEFT WING

1. Wing Tiedown - DISCONNECT
2. Fuel Quantity - CHECK VISUALLY for desired level
3. Fuel Filler Cap - SECURE and VENT CLEAR
4. Fuel Tank Sump Quick Drain Valves - DRAIN

Drain at least a cupful of fuel (using sampler cup) from each sump location to check for water, sediment, and proper fuel grade before each flight and after each refueling. If water is observed, take further samples until clear and then gently rock wings and lower tail to the ground to move any additional contaminants to the sampling points. Take repeated samples from **all** fuel drain points until **all** contamination has been removed. If contaminants are still present, refer to WARNING below and do not fly airplane.

NOTE

Collect all sampled fuel in a safe container. Dispose of the sampled fuel so that it does not cause a nuisance, hazard, or damage to the environment.

WARNING

IF, AFTER REPEATED SAMPLING, EVIDENCE OF CONTAMINATION STILL EXISTS, THE AIRPLANE SHOULD NOT BE FLOWN. TANKS SHOULD BE DRAINED AND SYSTEM PURGED BY QUALIFIED MAINTENANCE PERSONNEL. ALL EVIDENCE OF CONTAMINATION MUST BE REMOVED BEFORE FURTHER FLIGHT.

5. Main Wheel Tire - CHECK for proper inflation and general condition (weather checks, tread depth and wear, etc.).

(Continued Next Page)

PREFLIGHT INSPECTION (Continued)

(8) LEFT WING Trailing Edge

1. Aileron - CHECK freedom of movement and security
2. Flap - CHECK for security and condition

BEFORE STARTING ENGINE

1. Preflight Inspection - COMPLETE
2. Passenger Briefing - COMPLETE
3. Seats and Seat Belts - ADJUST and LOCK (Verify inertia reel locking)
4. Brakes - TEST and SET
5. Circuit Breakers - CHECK IN
6. Electrical Equipment - OFF
7. AVIONICS Switch (BUS 1 and BUS 2) - OFF

CAUTION

THE AVIONICS SWITCH (BUS 1 AND BUS 2) MUST BE OFF DURING ENGINE START TO PREVENT POSSIBLE DAMAGE TO AVIONICS.

8. FUEL SELECTOR Valve - BOTH
9. FUEL SHUTOFF Valve - ON (push full in)

STARTING ENGINE (With Battery)

1. Throttle Control - OPEN 1/4 INCH
2. Mixture Control - IDLE CUTOFF (pull full out)
3. STBY BATT Switch:
   a. TEST - (Hold for 20 seconds, verify that green TEST lamp does not go off)
   b. ARM - (Verify that PFD comes on)
4. Engine Indicating System - CHECK PARAMETERS (Verify no red X's through ENGINE page indicators)
5. BUS E Volts - CHECK (Verify 24 VOLTS minimum shown)
6. M BUS Volts - CHECK (Verify 1.5 VOLTS or less shown)
7. BATT S Amps - CHECK (Verify discharge shown (negative))
8. STBY BATT Annunciator - CHECK (Verify annunciator is shown)
9. Propeller Area - CLEAR (Verify that all people and equipment are at a safe distance from the propeller)

(Continued Next Page)

STARTING ENGINE (With Battery) (Continued)

10. Master Switch (ALT and BAT) - ON
11. BEACON Light Switch - ON

NOTE

If engine is warm, omit priming procedure steps 12 thru 14 below.

12. FUEL PUMP Switch - ON
13. Mixture Control - SET to FULL RICH (full forward) until stable fuel flow is indicated (approximately 3 to 5 seconds), then set to IDLE CUTOFF (full aft) position.
14. FUEL PUMP Switch - OFF
15. MAGNETOS Switch - START (release when engine starts)
16. Mixture Control - ADVANCE smoothly to RICH when engine starts.

NOTE

If the engine is primed too much (flooded), place the mixture control in the IDLE CUTOFF position, open the throttle control 1/2 to full, and engage the starter motor (START). When the engine starts, advance the mixture control to the FULL RICH position and retard the throttle control promptly.

17. Oil Pressure - CHECK (Verify that oil pressure increases into the GREEN ARC range in 30 to 60 seconds).
18. AMPS (M BATT and BATT S) - CHECK charge (positive)
19. LOW VOLTS Annunciator - CHECK (Verify annunciator is not shown)
20. NAV Lights Switch - ON as required
21. AVIONICS Switch (BUS 1 and BUS 2) - ON

STARTING ENGINE (With External Power)

1. Throttle Control - OPEN 1/4 INCH
2. Mixture Control - IDLE CUTOFF (pull full out)
3. STBY BATT Switch:
   a. TEST - (Hold for 20 seconds, verify green TEST lamp does not go off)
   b. ARM - (Verify that PFD comes on)
4. Engine Indication System - CHECK PARAMETERS (Verify no red X's through ENGINE page indicators)
5. BUS E Volts - CHECK (Verify 24 VOLTS minimum shown)
6. M BUS Volts - CHECK (Verify 1.5 VOLTS or less shown)
7. BATT S Amps - CHECK (Verify discharge shown (negative))
8. STBY BATT Annunciator - CHECK (Verify annunciator is shown)
9. AVIONICS Switch (BUS 1 and BUS 2) - OFF
10. MASTER Switch (ALT and BAT) - OFF
11. Propeller Area - CLEAR (Verify that all people and equipment are at a safe distance from the propeller)
12. External Power - CONNECT to ground power receptacle
13. MASTER Switch (ALT and BAT) - ON
14. BEACON Light Switch - ON
15. M BUS VOLTS - CHECK (Verify that approximately 28 VOLTS is shown)

NOTE

If engine is warm, omit priming procedure steps 16 thru 18 below.

16. FUEL PUMP Switch - ON
17. Mixture Control - SET to FULL RICH (full forward) until stable fuel flow is indicated (approximately 3 to 5 seconds), then set to IDLE CUTOFF (full aft) position.
18. FUEL PUMP Switch - OFF
19. MAGNETOS Switch - START (release when engine starts)

(Continued Next Page)

STARTING ENGINE (With External Power) (Continued)

20. Mixture Control - ADVANCE smoothly to RICH when engine starts.

NOTE

If the engine is primed too much (flooded), place the mixture control in the IDLE CUTOFF position, open the throttle control 1/2 to full, and engage the starter motor (START). When the engine starts, advance the mixture control to the FULL RICH position and retard the throttle control promptly.

21. Oil Pressure - CHECK (Verify oil pressure increases into the green arc range in 30 to 60 seconds)
22. Power - REDUCE to idle
23. External Power - DISCONNECT from ground power. (Latch external power receptacle door)
24. Power - INCREASE (to approximately 1500 RPM for several minutes to charge battery)
25. AMPS (M BATT and BATT S) - CHECK charge (positive)
26. LOW VOLTS Annunciator - CHECK (Verify annunciator is not shown)
27. Internal Power - CHECK
    a. MASTER Switch (ALT) - OFF
    b. TAXI and LANDING Light Switches - ON
    c. Throttle Control - REDUCE to idle
    d. MASTER Switch (ALT and BAT) - ON
    e. Throttle Control - INCREASE (to approximately 1500 RPM)
    f. Main Battery (M BATT) Ammeter - CHECK (Battery charging, Amps positive)
    g. LOW VOLTAGE Annunciator - CHECK (Verify annunciator is not shown)

WARNING

IF M BATT (MAIN BATTERY) DOES NOT SHOW + AMPS, REMOVE THE MAIN BATTERY FROM THE AIRPLANE AND SERVICE OR REPLACE THE BATTERY BEFORE FLIGHT.

28. NAV Lights Switch - ON as required
29. AVIONICS Switch (BUS 1 and BUS 2) - ON

BEFORE TAKEOFF

1. Parking Brake - SET
2. Pilot and Passenger Seat Backs - MOST UPRIGHT POSITION
3. Seats and Seat Belts - CHECK SECURE
4. Cabin Doors - CLOSED and LOCKED
5. Flight Controls - FREE and CORRECT
6. Flight Instruments (PFD) - CHECK (no red X's)
7. Altimeters:
   a. PFD (BARO) - SET
   b. Standby Altimeter - SET
   c. KAP 140 Autopilot (BARO) - SET (if installed)
8. G1000 ALT SEL - SET
9. KAP 140 Altitude Preselect - SET (if installed)

NOTE

There is no connection between the G1000 ALT SEL feature and the KAP 140 autopilot altitude preselect or altitude hold functions. G1000 and KAP 140 altitudes are set independently.

10. Standby Flight Instruments - CHECK
11. Fuel Quantity - CHECK (Verify level is correct)

NOTE

Flight is not recommended when both fuel quantity indicators are in the yellow arc range.

12. Mixture Control - RICH
13. FUEL SELECTOR Valve - SET BOTH
14. Elevator Trim Control - SET FOR TAKEOFF
15. Manual Electric Trim (MET) System (if installed) - CHECK (Refer to the POH/AFM, Supplement 3, for Manual Electric Trim check procedures)

(Continued Next Page)

BEFORE TAKEOFF (Continued)

16. Throttle Control - 1800 RPM
    a. MAGNETOS Switch - CHECK (RPM drop should not exceed 150 RPM on either magneto or 50 RPM differential between magnetos)
    b. VAC Indicator - CHECK
    c. Engine Indicators - CHECK
    d. Ammeters and Voltmeters - CHECK
17. Annunciators - CHECK (Verify no annunciators are shown)
18. Throttle Control - CHECK IDLE
19. Throttle Control - 1000 RPM or LESS
20. Throttle Control Friction Lock - ADJUST
21. COM Frequency(s) - SET
22. NAV Frequency(s) - SET
23. FMS/GPS Flight Plan - AS DESIRED

NOTE

Check GPS availability on AUX-GPS STATUS page. No annunciation is provided for loss of GPS2.

24. XPDR - SET
25. CDI Softkey - SELECT NAV source

CAUTION

THE G1000 HSI SHOWS A COURSE DEVIATION INDICATOR FOR THE SELECTED GPS, NAV 1 OR NAV 2 NAVIGATION SOURCE. THE G1000 HSI DOES NOT PROVIDE A WARNING “FLAG” WHEN A VALID NAVIGATION SIGNAL IS NOT BEING SUPPLIED TO THE INDICATOR. WHEN A VALID NAVIGATION SIGNAL IS NOT BEING SUPPLIED, THE COURSE DEVIATION BAR (D-BAR) PART OF THE INDICATOR IS NOT SHOWN ON THE HSI COMPASS CARD. THE MISSING D-BAR IS CONSIDERED TO BE THE WARNING FLAG.

(Continued Next Page)

BEFORE TAKEOFF (Continued)

WARNING

WHEN THE KAP 140 AUTOPILOT IS ENGAGED IN NAV, APR OR REV OPERATING MODES, IF THE HSI NAVIGATION SOURCE IS CHANGED FROM GPS TO NAV1, AUTOMATICALLY OR MANUALLY (USING THE CDI SOFTKEY), OR MANUALLY FROM NAV2 TO GPS, THE CHANGE WILL INTERRUPT THE NAVIGATION SIGNAL TO THE AUTOPILOT AND WILL CAUSE THE AUTOPILOT TO REVERT TO ROLL MODE OPERATION. NO WARNING CHIME OR PFD ANNUNCIATION WILL BE PROVIDED. THE PREVIOUSLY SELECTED MODE SYMBOL SHOWN ON THE AUTOPILOT DISPLAY WILL BE FLASHING TO SHOW THE REVERSION TO ROLL MODE OPERATION. IN ROLL MODE, THE AUTOPILOT WILL ONLY KEEP THE WINGS LEVEL AND WILL NOT CORRECT THE AIRPLANE HEADING OR COURSE. SET THE HDG BUG TO THE CORRECT HEADING AND SELECT THE CORRECT NAVIGATION SOURCE ON THE HSI USING THE CDI SOFTKEY BEFORE ENGAGING THE AUTOPILOT IN ANY OTHER OPERATING MODE.

26. Autopilot - OFF (if installed)
27. CABIN PWR 12V Switch - OFF (if installed)
28. Wing Flaps - UP - 10° (10° preferred)
29. Cabin Windows - CLOSED and LOCKED
30. STROBE Lights Switch - ON
31. Brakes - RELEASE

TAKEOFF

NORMAL TAKEOFF

1. Wing Flaps - UP - 10° (10° preferred)
2. Throttle Control - FULL (push full in)
3. Mixture Control - RICH
   (Above 3000 feet pressure altitude, lean for maximum RPM)
4. Elevator Control - LIFT NOSEWHEEL AT 55 KIAS
5. Climb Speed - 70 - 80 KIAS
6. Wing Flaps - RETRACT at safe altitude

SHORT FIELD TAKEOFF

1. Wing Flaps - 10°
2. Brakes - APPLY
3. Throttle Control - FULL (push full in)
4. Mixture Control - RICH
   (Above 3000 feet pressure altitude, lean for maximum RPM)
5. Brakes - RELEASE
6. Elevator Control - SLIGHTLY TAIL LOW
7. Climb Speed - 56 KIAS (Until all obstacles are cleared)
8. Wing Flaps - RETRACT SLOWLY (When airspeed is more than 60 KIAS)

ENROUTE CLIMB

1. Airspeed - 70 - 85 KIAS
2. Throttle Control - FULL (push full in)
3. Mixture Control - RICH
   (Above 3000 feet pressure altitude, lean for maximum RPM)

CRUISE

1. Power - 2100 - 2700 RPM (No more than 75% power is recommended)

NOTE

If a maximum performance climb is necessary, use speeds shown in the Rate-of-Climb chart in section 5.

2. Elevator Trim Control - ADJUST
3. Mixture Control - LEAN for desired performance or economy
4. FMS/GPS - REVIEW and BRIEF OBS/SUSP softkey operation for holding pattern procedure (IFR)

DESCENT

1. Power - AS DESIRED
2. Mixture - ADJUST if necessary to make the engine run smoothly.
3. Altimeters:
   a. PFD (BARO) - SET
   b. Standby Altimeter - SET
   c. KAP 140 Autopilot (BARO) - SET (if installed)
4. G1000 ALT SEL - SET
5. KAP 140 Altitude Preselect - SET (if installed)

NOTE

There is no connection between the G1000 ALT SEL feature and the KAP 140 autopilot altitude preselect or altitude hold functions. G1000 and KAP 140 altitudes are set independently.

6. CDI Softkey - SELECT NAV source
7. FMS/GPS - REVIEW and BRIEF OBS/SUSP softkey operation for holding pattern procedure (IFR).

(Continued Next Page)

DESCENT (Continued)

CAUTION

THE G1000 HSI SHOWS A COURSE DEVIATION INDICATOR FOR THE SELECTED GPS, NAV 1 OR NAV 2 NAVIGATION SOURCE. THE G1000 HSI DOES NOT PROVIDE A WARNING "FLAG" WHEN A VALID NAVIGATION SIGNAL IS NOT BEING SUPPLIED TO THE INDICATOR. WHEN A VALID NAVIGATION SIGNAL IS NOT BEING SUPPLIED, THE COURSE DEVIATION BAR (D-BAR) PART OF THE INDICATOR IS NOT SHOWN ON THE HSI COMPASS CARD. THE MISSING D-BAR IS CONSIDERED TO BE THE WARNING FLAG.

WARNING

WHEN THE KAP 140 AUTOPILOT IS ENGAGED IN NAV, APR OR REV OPERATING MODES, IF THE HSI NAVIGATION SOURCE IS CHANGED FROM GPS TO NAV1, AUTOMATICALLY OR MANUALLY (USING THE CDI SOFTKEY), OR MANUALLY FROM NAV2 TO GPS, THE CHANGE WILL INTERRUPT THE NAVIGATION SIGNAL TO THE AUTOPILOT AND WILL CAUSE THE AUTOPILOT TO REVERT TO ROLL MODE OPERATION. NO WARNING CHIME OR PFD ANNUNCIATION WILL BE PROVIDED. THE PREVIOUSLY SELECTED MODE SYMBOL SHOWN ON THE AUTOPILOT DISPLAY WILL BE FLASHING TO SHOW THE REVERSION TO ROLL MODE OPERATION. IN ROLL MODE, THE AUTOPILOT WILL ONLY KEEP THE WINGS LEVEL AND WILL NOT CORRECT THE AIRPLANE HEADING OR COURSE. SET THE HDG BUG TO THE CORRECT HEADING AND SELECT THE CORRECT NAVIGATION SOURCE ON THE HSI USING THE CDI SOFTKEY BEFORE ENGAGING THE AUTOPILOT IN ANY OTHER OPERATING MODE.

(Continued Next Page)

DESCENT (Continued)

8. FUEL SELECTOR Valve - BOTH
9. Wing Flaps - AS DESIRED (UP - 10° below 110 KIAS, 10° - FULL below 85 KIAS)

BEFORE LANDING

1. Pilot and Passenger Seat Backs - MOST UPRIGHT POSITION
2. Seats and Seat Belts - SECURED and LOCKED
3. FUEL SELECTOR Valve - BOTH
4. Mixture Control - RICH
5. LANDING and TAXI Light Switches - ON
6. Autopilot - OFF (if installed)
7. CABIN PWR 12V Switch - OFF (if installed)

LANDING

NORMAL LANDING

1. Airspeed - 65 - 75 KIAS (Flaps UP)
2. Wing Flaps - AS DESIRED (UP - 10° below 110 KIAS, 10° - FULL below 85 KIAS)
3. Airspeed - 60 - 70 KIAS (Flaps FULL)
4. Elevator Trim Control - ADJUST
5. Touchdown - MAIN WHEELS FIRST
6. Landing Roll - LOWER NOSEWHEEL GENTLY
7. Braking - MINIMUM REQUIRED

SHORT FIELD LANDING

1. Airspeed - 65 - 75 KIAS (Flaps UP)
2. Wing Flaps - FULL
3. Airspeed - 61 KIAS (until flare)
4. Elevator Trim Control - ADJUST
5. Power - REDUCE to idle after clearing obstacle
6. Touchdown - MAIN WHEELS FIRST
7. Brakes - APPLY HEAVILY
8. Wing Flaps - UP

BALKED LANDING

1. Throttle Control - FULL (push full in)
2. Wing Flaps - RETRACT to 20°
3. Climb Speed - 60 KIAS
4. Wing Flaps - 10° (until obstacles are cleared), then UP (after reaching a safe altitude and 65 KIAS)

AFTER LANDING

1. Wing Flaps - UP

SECURING AIRPLANE

1. Parking Brake - SET
2. Throttle Control - IDLE (pull full out)
3. Electrical Equipment - OFF
4. AVIONICS Switch (BUS 1 and BUS 2) - OFF
5. Mixture Control - IDLE CUTOFF (pull full out)
6. MAGNETOS Switch - OFF
7. MASTER Switch (ALT and BAT) - OFF
8. STBY BATT Switch - OFF
9. Control Lock - INSTALL
10. FUEL SELECTOR Valve - LEFT or RIGHT (to prevent crossfeeding between tanks)

AMPLIFIED PROCEDURES

PREFLIGHT INSPECTION

The Preflight Inspection, described in Figure 4-1 and adjacent checklist, is required prior to each flight. If the airplane has been in extended storage, has had recent major maintenance, or has been operated from rough runways, a more extensive exterior inspection is recommended.

Before every flight, check the condition of main and nose landing gear tires. Keep tires inflated to the pressure specified in Section 8, Airplane Handling, Service And Maintenance. Examine tire sidewalls for patterns of shallow cracks called weather checks. These cracks are evidence of tire deterioration caused by age, improper storage, or prolonged exposure to weather. Check the tread of the tire for depth, wear, and cuts. Replace the tire if fibers are visible.

After major maintenance has been performed, the flight and trim tab controls should be double checked for free and correct movement and security. The security of all inspection plates on the airplane should be checked following periodic inspections. If the airplane has been waxed or polished, check the external static pressure source hole for stoppage.

If the airplane has been kept in a crowded hangar, it should be checked for dents and scratches on wings, fuselage, and tail surfaces, damage to navigation, strobe lights, and avionics antennas. Check for damage to the nosewheel steering system, the result of exceeding nosewheel turning limits while towing.

Outside storage for long periods may result in dust and dirt accumulation on the induction air filter, obstructions in airspeed system lines, water contaminants in fuel tanks and insect/bird/rodent nests in any opening. If any water is detected in the fuel system, the fuel tank sump quick drain valves, fuel reservoir quick drain valve, and fuel strainer quick drain valve should all be thoroughly drained again. The wings should then be gently rocked and the tail lowered to the ground to move any further contaminants to the sampling points. Repeated samples should then be taken at **all** quick drain points until **all** contamination has been removed. If, after repeated sampling, evidence of contamination still exists, the fuel tanks should be completely drained and the fuel system cleaned.

(Continued Next Page)

PREFLIGHT INSPECTION (Continued)

If the airplane has been stored outside in windy or gusty areas, or tied down adjacent to taxiing airplanes, special attention should be paid to control surface stops, hinges, and brackets to detect the presence of potential wind damage.

If the airplane has been operated from muddy fields or in snow or slush, check the main and nose gear wheel fairings for obstructions and cleanliness. Operation from a gravel or cinder field will require extra attention to propeller tips and abrasion on leading edges of the horizontal tail. Stone damage to the propeller can seriously reduce the fatigue life of the blades.

Airplanes that are operated from rough fields, especially at high altitudes, are subjected to abnormal landing gear abuse. Frequently check all components of the landing gear, shock strut, tires, and brakes. If the shock strut is insufficiently extended, undue landing and taxi loads will be subjected on the airplane structure.

To prevent loss of fuel in flight, make sure the fuel tank filler caps are tightly sealed after any fuel system check or servicing. Fuel system vents should also be inspected for obstructions, ice or water, especially after exposure to cold, wet weather.

STARTING ENGINE

In cooler weather, the engine compartment temperature drops off rapidly following engine shutdown and the injector nozzle lines remain nearly full of fuel.

In warmer weather, engine compartment temperatures may increase rapidly following engine shutdown, and fuel in the lines will vaporize and escape into the intake manifold. Hot weather starting procedures depend considerably on how soon the next engine start is attempted. Within the first 20 to 30 minutes after shutdown, the fuel manifold is adequately primed and the empty injector nozzle lines will fill before the engine dies. However, after approximately 30 minutes, the vaporized fuel in the manifold will have nearly dissipated and some slight “priming” could be required to refill the nozzle lines and keep the engine running after the initial start. Starting a hot engine is facilitated by advancing the mixture control promptly to 1/3 open when the engine starts, and then smoothly to full rich as power develops.

(Continued Next Page)

STARTING ENGINE (Continued)

If the engine does not continue to run, set the FUEL PUMP switch to the ON position temporarily and adjust the throttle and/or mixture as necessary to keep the engine running. In the event of over priming or flooding, set the FUEL PUMP switch to OFF, open the throttle from 1/2 to full open, and continue cranking with the mixture in the idle CUTOFF position (pull full out). When the engine fires, smoothly advance the mixture control to full rich and retard the throttle to desired idle speed.

If the engine is under primed (most likely in cold weather with a cold engine) it will not start at all, and additional priming will be necessary.

After starting, if the oil pressure gage does not begin to show pressure within 30 seconds in warmer temperatures and approximately one minute in very cold weather, stop the engine and find cause before continued operation. Lack of oil pressure can cause serious engine damage.

NOTE

Additional details concerning cold weather starting and operation may be found under COLD WEATHER OPERATION paragraphs in this section.

RECOMMENDED STARTER DUTY CYCLE

Operate the starter motor for 10 seconds followed by a 20 second cool down period. This cycle can be repeated two additional times, followed by a ten minute cool down period before resuming cranking. After cool down, operate the starter motor again, three cycles of 10 seconds followed by 20 seconds of cool down. If the engine still does not start, try to find the cause.

(Continud Next Page)

LEANING FOR GROUND OPERATIONS

For all ground operations, after starting the engine and when the engine is running smoothly:

1. Set the Throttle Control to 1200 RPM.
2. Lean the mixture for maximum RPM.
3. Set the Throttle Control to an RPM appropriate for ground operations (800 to 1000 RPM recommended).

NOTE

If ground operation will be required after the BEFORE TAKEOFF checklist is completed, lean the mixture again (as described above) until ready for the TAKEOFF checklist.

TAXIING

When taxiing, it is important that speed and use of brakes be held to a minimum and that all controls be utilized (Refer to Figure 4-2, Taxiing Diagram) to maintain directional control and balance.

Taxiing over loose gravel or cinders should be done at low engine speed to avoid abrasion and stone damage to the propeller tips.

NOTE

The LOW VOLTS annunciator may come on when the engine is operated at low RPM with a high load on the electrical system. If this is the case, the LOW VOLTS annunciator will go off when the engine is run at higher RPM to provide greater alternator system output. Verify that the M BATT AMPS indication shows positive (charging) current at the higher RPM.

(Continued Next Page)

TAXIING (Continued)

TAXIING DIAGRAM

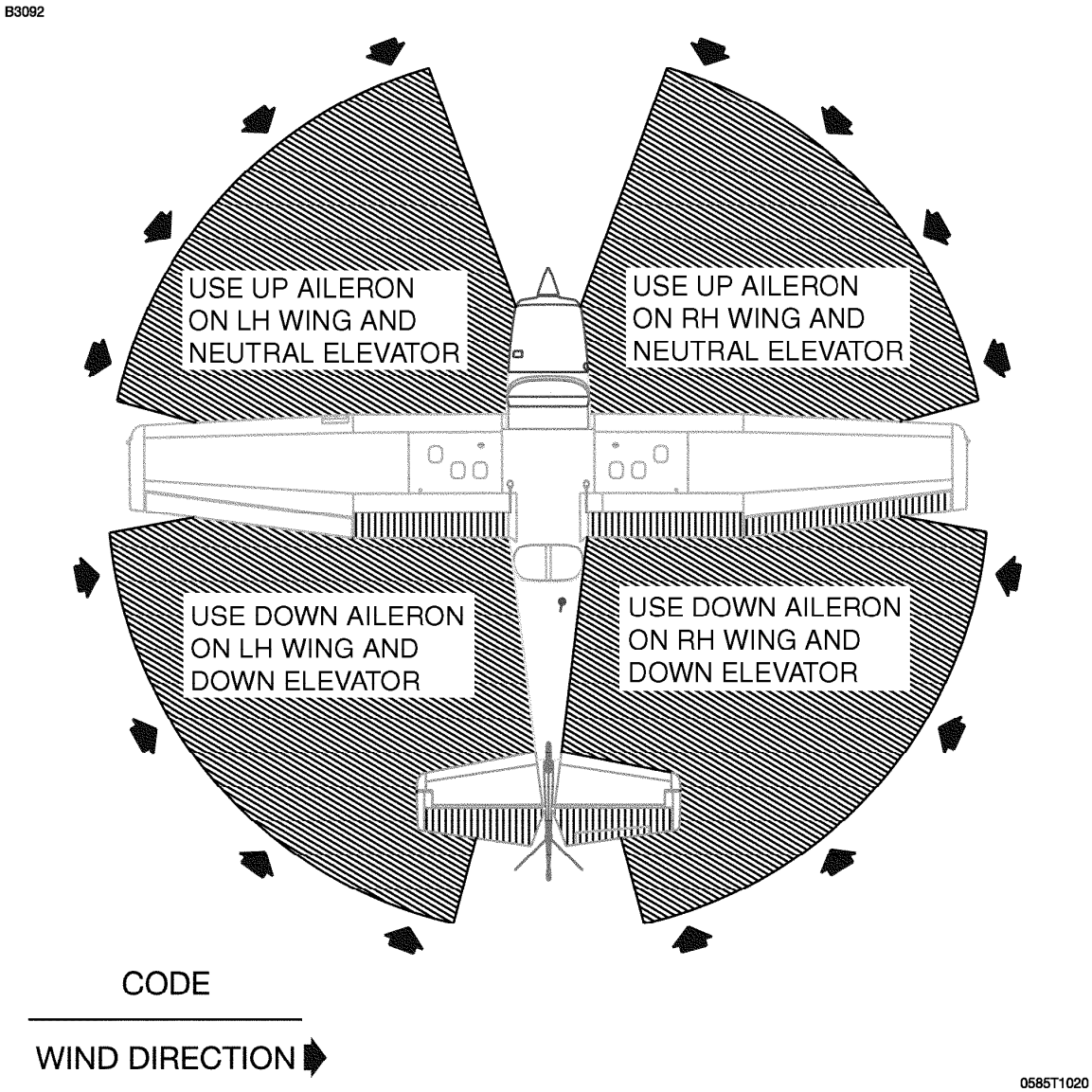

NOTE

Strong quartering tail winds require caution. Avoid sudden bursts of the throttle and sharp braking when the airplane is in this attitude. Use the steerable nosewheel and rudder to maintain direction.

Figure 4-2

BEFORE TAKEOFF

WARM UP

If the engine idles (approximately 600 RPM) and accelerates smoothly, the airplane is ready for takeoff. Since the engine is closely cowled for efficient in-flight engine cooling, be careful to avoid overheating during prolonged engine operation on the ground. Long periods of idling can cause fouled spark plugs.

MAGNETO CHECK

The magneto check must be done at 1800 RPM. Turn the MAGNETOS switch from the BOTH position to the R position. Note the new RPM, then turn the MAGNETOS switch back to the BOTH position to clear the spark plugs. Turn the MAGNETOS switch to the L position, note the new RPM, then turn the switch back to the BOTH position. RPM decrease should not be more than 150 RPM on either magneto or be greater than 50 RPM difference between magnetos. If there is a doubt concerning operation of the ignition system, RPM checks at higher engine speeds will usually confirm whether a deficiency exists.

No RPM drop may indicate a faulty ground to one magneto or magneto timing set in advance of the angle specified.

ALTERNATOR CHECK

Make sure that both the alternator and alternator control unit are operating properly before night or instrument flight, or flights where electrical power is essential. Check the electrical system during the MAGNETO check (1800 RPM) by setting all electrical equipment required for the flight to the ON position. When the alternator and alternator control unit are both operating properly, the ammeters will show zero or positive current (amps), the voltmeters should show between 27 to 29 volts, and no electrical system annunciations will appear. Reduce the electrical load before reducing engine speed so the battery will not discharge while the engine is at idle.

(Continued Next Page)

BEFORE TAKEOFF (Continued)

ELEVATOR TRIM

The elevator trim tab is in the takeoff position when the trim pointer is aligned with the index mark on the pedestal cover. Adjust the trim wheel during flight as necessary to make control wheel forces more neutral.

LANDING LIGHTS

It is recommended that only the taxi light be used to enhance the visibility of the airplane in the traffic pattern or enroute. This will extend the service life of the landing light.

TAKEOFF

POWER CHECK

It is important to check full throttle engine operation early in the takeoff roll. Any sign of rough engine operation or sluggish engine acceleration is good cause for discontinuing the takeoff. The engine should run smoothly and turn approximately 2300 - 2400 RPM with mixture leaned to provide maximum RPM.

Full throttle run ups over loose gravel are especially harmful to propeller tips. When takeoffs must be made over a gravel surface, advance the throttle slowly. This allows the airplane to start rolling before high RPM is developed, and the gravel will be blown behind the propeller rather than pulled into it.

Prior to takeoff from fields above 3000 feet pressure elevation, the mixture should be leaned to give maximum RPM at full throttle with the airplane not moving.

After full throttle is applied, adjust the throttle friction lock clockwise to prevent the throttle from moving back from the maximum power position. Similar friction lock adjustments should be made as required in other flight conditions to hold the throttle setting.

(Continued Next Page)

TAKEOFF (Continued)

WING FLAP SETTINGS

Normal takeoffs use wing flaps UP - 10°. Using 10° wing flaps reduces the ground roll and total distance over an obstacle by approximately 10 percent. **Flap deflections greater than 10° are not approved for takeoff**. If 10° wing flaps are used for takeoff, the flaps should stay at 10° until all obstacles are cleared and a safe flap retraction speed of 60 KIAS is reached. For a short field, 10° wing flaps and an obstacle clearance speed of 56 KIAS should be used.

Soft or rough field takeoffs are performed with 10° flaps by lifting the airplane off the ground as soon as practical in a slightly tail low attitude. If no obstacles are ahead, the airplane should be leveled off immediately to accelerate to a higher climb speed. When departing a soft field with an aft C.G. loading, the elevator trim control should be adjusted towards the nose down direction to give comfortable control wheel forces during the initial climb.

CROSSWIND TAKEOFF

Takeoffs into strong crosswind conditions normally are performed with the minimum flap setting necessary for the field length to minimize the drift angle immediately after takeoff. With the ailerons partially deflected into the wind, the airplane is accelerated to a speed slightly higher than normal, then the elevator control is used to quickly, but carefully, lift the airplane off the ground and to prevent possible settling back to the runway while drifting. When clear of the ground, make a coordinated turn into the wind to correct for drift.

ENROUTE CLIMB

Normal enroute climbs are performed with flaps up, at 75 - 85 KIAS and full throttle for the best combination of performance, visibility and engine cooling. The mixture should be full rich during climb at altitudes up to 3000 feet pressure altitude. Above 3000 feet pressure altitude, the mixture can be leaned as needed for increased power or to provide smoother engine operation.

If it is necessary to climb more rapidly to clear mountains or reach favorable winds at higher altitudes, the best rate of climb speed should be used with maximum power. This speed is 74 KIAS at sea level, decreasing to 72 KIAS at 10,000 feet.

If an obstruction dictates the use of a steep climb angle, the best angle-of-climb speed should be used with flaps up and maximum power. This speed is 62 KIAS at sea level, increasing to 67 KIAS at 10,000 feet. This type of climb should be of the minimum duration and engine temperatures should be carefully monitored due to the low climb speed.

CRUISE

Normal cruise is performed between 45% and 75% power. The engine RPM and corresponding fuel consumption for various altitudes can be determined by using the data in Section 5.

NOTE

Cruise flight should use 75% power as much as possible until the engine has operated for a total of 50 hours or oil consumption has stabilized. Operation at this higher power will ensure proper seating of the rings and is applicable to new engines, and engines in service following cylinder replacement or top overhaul of one or more cylinders.

The Cruise Performance charts in Section 5 provide the pilot with flight planning information for the Model 172S in still air. Power, altitude, and winds determine the time and fuel needed to complete any flight.

(Continued Next Page)

CRUISE (Continued)

The Cruise Performance Table, Figure 4-3, shows the true airspeed and nautical miles per gallon during cruise for various altitudes and percent powers, and is based on standard conditions and zero wind. This table should be used as a guide, along with the available winds aloft information, to determine the most favorable altitude and power setting for a given trip. The selection of cruise altitude on the basis of the most favorable wind conditions and the use of low power settings are significant factors that should be considered on every trip to reduce fuel consumption.

In addition to power settings, proper leaning techniques also contribute to greater range and are figured into cruise performance tables. To achieve the recommended lean mixture fuel consumption figures shown in Section 5, the mixture should be leaned using the exhaust gas temperature (EGT) indicator as noted.

CRUISE PERFORMANCE TABLE

CONDITIONS:
Standard Conditions
Zero Wind

ALTITUDE	75% POWER		65% POWER		55% POWER	
	KTAS	NMPG	KTAS	NMPG	KTAS	NMPG
Sea Level	114	11.2	108	12.0	101	12.8
4000 feet	119	11.7	112	12.4	104	13.2
8000 feet	124	12.2	117	12.9	107	13.6

Figure 4-3

(Continued Next Page)

CRUISE (Continued)

LEANING USING EXHAUST GAS TEMPERATURE (EGT)

The cruise performance data in this handbook is based on the recommended lean mixture setting determined from the maximum or Peak Exhaust Gas Temperature (EGT) at power settings of 75% Maximum Continuous Power (MCP) and less. The 172S Nav III provides EGT indications for all (4) engine cylinders. The ability to monitor all cylinders is an aid in early identification and correction of fuel injection system problems.

NOTE

All engine cylinders do not receive identical fuel/air mixtures (due to unequal intake pipe lengths, uneven intake air temperatures, fuel injection nozzle tolerances etc.). However, all cylinder EGTs should be within approximately 100°F of each other during normal operations. An EGT difference greater than 100°F between cylinders indicates that fuel injection system maintenance is necessary.

EGT is displayed on the EIS ENGINE and LEAN pages. The ENGINE page has a horizontal scale with a temperature indicator (inverted triangle) with a number representing the cylinder with the highest EGT.

The EIS LEAN page provides vertical bar graph displays showing EGT for all cylinders. The cylinder with the highest EGT is shown in cyan (light blue). The numerical value for the highest EGT is located below the bar. The EGT and Cylinder Head Temperature (CHT) value for any cylinder may be shown by using the CYL SLCT softkey to select the desired cylinder. After a short period without CYL SLCT softkey activity, automatic indication of the highest EGT and CHT will start again.

(Continued Next Page)

CRUISE (Continued)

LEANING USING EXHAUST GAS TEMPERATURE (EGT) (Continued)

To aid in leaning the mixture, push the ENGINE, LEAN and ASSIST softkeys, ΔPEAK °F will display below the EGT °F numerical value. Lean the mixture by slowly turning the Mixture Control knob in the counterclockwise direction while monitoring EGTs. As EGTs increase, continue to lean the mixture until the hottest (cyan) cylinder reaches Peak EGT. This is identified by the EGT bar graph for that cylinder changing to cyan with a hollow bar at the top. Note the ΔPEAK °F and FFLOW GPH values for the first peaked cylinder. Peak EGT is represented by ΔPEAK 0°F, if ΔPEAK °F value is negative (-) the mixture can be on the lean side of peak. Enrichen the mixture by slowly turning the mixture control clockwise and monitor both fuel flow and EGTs until the leanest cylinder returns to peak EGT (ΔPEAK 0°F) or desired setting based on the EGT Table, Figure 4-4.

ΔPEAK °F values rich of peak will also be a negative (-) value (-50°). The lean assist system calculation is defined such that the peak EGT is the highest value and any lesser value is represented with a negative (-) value, whether on the lean or rich side of the peak.

NOTE

The 172S engine manufacturer, Textron Lycoming, has not approved operation of the engine at fuel flow rates (mixture settings) less than necessary to reach Peak EGT in the leanest cylinder (the first cylinder to reach peak EGT). Use FULL RICH mixture when operating the engine above 75% power.

(Continued Next Page)

CRUISE (Continued)

LEANING USING EXHAUST GAS TEMPERATURE (EGT) (Continued)

EGT TABLE

MIXTURE DESCRIPTION	EXHAUST GAS TEMPERATURE
RECOMMENDED LEAN (Pilot's Operating Handbook)	50° Rich of Peak EGT
BEST ECONOMY	Peak EGT

Figure 4-4

Operation at peak EGT provides the best fuel economy. This results in approximately 4% greater range than shown in this handbook accompanied by approximately a 3 knot decrease in speed.

Under some conditions, engine roughness may occur while operating at peak EGT. In this case, operate at the Recommended Lean mixture.

NOTE

- Any change in altitude or power setting will require a change in the recommended lean mixture setting and a recheck of the EGT setting.

- The EGT indicators take several seconds, after a mixture adjustment, to start to show exhaust gas temperature changes. Finding peak EGT and adjusting the mixture to the applicable setting should take approximately one minute when the adjustments are made carefully and accurately. Adjusting the mixture quickly is not recommended.

(Continued Next Page)

CRUISE (Continued)

FUEL SAVINGS PROCEDURES FOR FLIGHT TRAINING OPERATIONS

For best fuel economy during flight training operations, the following procedures are recommended.

1. After engine start and for all ground operations, set the throttle to 1200 RPM and lean the mixture for maximum RPM. After leaning, set the throttle to the appropriate RPM for ground operations. Leave the mixture at this setting until beginning the BEFORE TAKEOFF checklist. After the BEFORE TAKEOFF checklist is complete re-lean the mixture as described above until ready for the TAKEOFF checklist.

2. Lean the mixture for maximum RPM during full throttle climbs above 3000 feet. The mixture may remain leaned (maximum RPM at full throttle) for practicing maneuvers such as stalls and slow flight.

3. Lean the mixture for maximum RPM during all operations at any altitude, including those below 3000 feet, when using 75% or less power.

NOTE

- When cruising or maneuvering at 75% or less power, the mixture may be further leaned until the EGT indicator peaks and is then enrichened 50°F. This is especially applicable to cross-country training flights, but should be practiced during transition flight to and from the practice area as well.
- Using the above recommended procedures can provide fuel savings in excess of 5% when compared to typical training operations at full rich mixture. In addition, the above procedures will minimize spark plug fouling since the reduction in fuel consumption results in a proportional reduction in tetraethyl lead passing through the engine.

(Continued Next Page)

CRUISE (Continued)

FUEL VAPOR PROCEDURES

The engine fuel system can cause fuel vapor formation on the ground during warm weather. This will generally occur when the outside ambient air temperature is above 80°F. Vapor formation may increase when the engine fuel flows are lower at idle and taxi engine speeds. The following procedures are recommended when engine idle speed and fuel flow fluctuations show that fuel vapor may be present:

1. With the mixture full rich, set the throttle at 1800 RPM to 2000 RPM. Maintain this power setting for 1 to 2 minutes or until smooth engine operation returns.

2. Retard the throttle to idle to verify normal engine operation.

3. Advance the throttle to 1200 RPM and lean the mixture as described under FUEL SAVINGS PROCEDURES FOR FLIGHT TRAINING OPERATIONS.

4. In addition to the above procedures, the Auxiliary Fuel Pump may be turned ON with the mixture adjusted as required to aid vapor suppression during ground operations. The Auxiliary Fuel Pump should be turned OFF prior to takeoff.

5. Just prior to TAKEOFF, apply full throttle, for approximately 10 seconds to verify smooth engine operation for takeoff.

NOTE

When the engine is operated above 1800 RPM, the resulting increased fuel flow also makes for lower fuel temperatures throughout the engine fuel system. This increased flow purges the fuel vapor and the cooler fuel minimizes vapor formation.

(Continued Next Page)

CRUISE (Continued)

FUEL VAPOR PROCEDURES (Continued)

In addition to the above procedures, the sections below should be reviewed, and where applicable, adhered to:

Section 3 - Take note of the excessive fuel vapor procedures in both the checklist and the amplified procedures sections.

Section 4 - Take note of the hot weather operational notes and procedures in both the checklist and the amplified procedures sections.

Section 7 Take note of the altitude operational procedures and the section on auxiliary fuel pump operation.

STALLS

The stall characteristics are conventional. An aural warning is provided by a stall warning horn which sounds between 5 and 10 knots above the stall in all configurations.

Power off stall speeds at maximum weight for both forward and aft C.G. positions are presented in Section 5.

SPINS

Intentional spins are approved when the airplane is operated in the utility category. Spins with baggage loadings or occupied rear seat(s) are not approved.

However, before attempting to perform spins several items should be carefully considered to assure a safe flight. No spins should be attempted without first having received dual instruction both in spin entries and spin recoveries from a qualified instructor who is familiar with the spin characteristics of the Cessna 172S NAV III airplane.

The cabin should be clean and all loose equipment (including the microphone and rear seat belts) should be stowed or secured. For a solo flight in which spins will be conducted, the copilot's seat belt and shoulder harness should also be secured. Care should be taken to ensure that the pilot can easily reach the flight controls and produce maximum control travels.

(Continued Next Page)

SPINS (Continued)

It is recommended that entries be accomplished at high enough altitude that recoveries are completed 4000 feet or more above ground level. At least 1000 feet of altitude loss should be allowed for a 1-turn spin and recovery, while a 6-turn spin and recovery may require somewhat more than twice that amount. For example, the recommended entry altitude for a 6-turn spin would be 6000 feet above ground level. In any case, entries should be planned so that recoveries are completed well above the minimum 1500 feet above ground level required by FAR 91.303. Another reason for using high altitudes for practicing spins is that a greater field of view is provided which will assist in maintaining pilot orientation.

The normal entry is made from a power off stall. As the stall is approached, the elevator control should be smoothly pulled to the full aft position. Just prior to reaching the stall "break", rudder control in the desired direction of the spin rotation should be applied so that full rudder deflection is reached almost simultaneously with reaching full aft elevator. A slightly greater rate of deceleration than for normal stall entries, application of ailerons in the direction of the desired spin, and the use of power at the entry will assure more consistent and positive entries to the spin. As the airplane begins to spin, reduce the power to idle and return the ailerons to neutral. Both elevator and rudder controls should be held full with the spin until the spin recovery is initiated. An inadvertent relaxation of either of these controls could result in the development of a nose down spiral.

For the purpose of training in spins and spin recoveries, a 1 or 2 turn spin is adequate and should be used. Up to 2 turns, the spin will progress to a fairly rapid rate of rotation and a steep attitude. Application of recovery controls will produce prompt recoveries (within 1/4 turn). During extended spins of two to three turns or more, the spin will tend to change into a spiral, particularly to the right. This will be accompanied by an increase in airspeed and gravity loads on the airplane. If this occurs, recovery should be accomplished promptly but smoothly by leveling the wings and recovering from the resulting dive.

(Continued Next Page)

SPINS (Continued)

Regardless of how many turns the spin is held or how it is entered, the following recovery technique should be used:

1. VERIFY THAT THROTTLE IS IN IDLE POSITION AND AILERONS ARE NEUTRAL.
2. APPLY AND **HOLD** FULL RUDDER OPPOSITE TO THE DIRECTION OF ROTATION.
3. JUST **AFTER** THE RUDDER REACHES THE STOP, MOVE THE CONTROL WHEEL **BRISKLY** FORWARD FAR ENOUGH TO BREAK THE STALL.
4. **HOLD** THESE CONTROL INPUTS UNTIL ROTATION STOPS.
5. AS ROTATION STOPS, NEUTRALIZE RUDDER, AND MAKE A SMOOTH RECOVERY FROM THE RESULTING DIVE.

NOTE

If disorientation makes the direction of rotation difficult to determine, see the turn vector near the index at the top of the Horizontal Situation Indicator (HSI).

Variations in basic airplane rigging or in weight and balance due to installed equipment or right seat occupancy can cause differences in behavior, particularly in extended spins. These differences are normal and will result in variations in the spin characteristics and in the spiraling tendencies for spins of more than 2 turns. However, the recovery technique should always be used and will result in the most expeditious recovery from any spin.

Intentional spins with flaps extended are prohibited, since the high airspeeds which may occur during recovery can be more than the flap airspeed limitation and can damage the flap and wing structures.

(Continued Next Page)

HOLDING, PROCEDURE TURNS AND MISSED APPROACHES

NOTE

Due to the sophistication of the G1000 Flight Management System (FMS), IFR enroute and instrument approach procedures using the G1000 FMS/GPS and KAP 140 Autopilot should be mastered in VFR conditions (with a safety pilot) before attempting IFR operations. Refer to the G1000 Cockpit Reference Guide for additional information.

Special consideration must be given to SUSP softkey operation and KAP 140 mode selection during holding pattern, course reversal maneuver (procedure turn) or missed approach procedures when using the G1000 FMS/GPS. The G1000 FMS/GPS provides initial entry cues for the procedure turn and the holding pattern but does not provide course guidance for either maneuver.

Holding pattern operations, whether in the enroute or the terminal environment, require temporary suspension of flight plan execution on reaching the holding waypoint. If the holding pattern is part of an Instrument Approach Procedure (IAP) without an associated Procedure Turn, suspend (SUSP) mode will be invoked automatically by the G1000 FMS/GPS on reaching the holding waypoint (usually an IAF). Holding at an enroute waypoint will require the pilot to manually suspend flight plan execution using the OBS softkey and set the course pointer to the inbound course.

CAUTION

IF THE KAP 140 AUTOPILOT IS ENGAGED IN EITHER NAV OR APR MODE WHEN THE G1000 FMS/GPS GOES TO SUSP MODE OR IF THE PILOT MANUALLY SELECTS OBS MODE, THE KAP 140 AUTOPILOT WILL BE OPERATING WITHOUT A VALID NAVIGATION SOURCE. SELECT HDG MODE FOR KAP 140 AUTOPILOT OPERATION AND CONTROL AIRCRAFT HEADING USING THE HDG CONTROL ON THE PFD (TO SET THE HSI HEADING BUG).

(Continued Next Page)

HOLDING, PROCEDURE TURNS AND MISSED APPROACHES (Continued)

NOTE

If the holding waypoint is shown with a holding pattern on the MFD NAVIGATION MAP display, selecting the OBS softkey (to suspend flight plan execution) will cause the G1000 to erase the depicted holding pattern from the display.

The G1000 FMS/GPS provides course guidance on the inbound leg (toward the holding waypoint) of the holding pattern only. Turns at either end of the holding pattern and the outbound leg must be executed by the pilot manually or by setting the KAP 140 Autopilot to HDG mode and then setting the HDG bug on the PFD to command the Autopilot to turn to each new heading. The KAP 140 Autopilot may be set to APR mode to track the inbound course but must be returned to HDG mode for command through the remainder of the holding pattern.

NOTE

On interception of the inbound course for RNAV(GPS) Approach holding patterns, SUSP will be automatically deselected by the G1000 FMS/GPS. If continued holding is desired, SUSP must be manually selected before reaching the holding waypoint.

When the pilot wants to discontinue holding, either to proceed enroute or for the IAP, flight plan execution is resumed by selecting the OBS or SUSP key as appropriate.

(Continued Next Page)

HOLDING, PROCEDURE TURNS AND MISSED APPROACHES (Continued)

The G1000 FMS/GPS treats the procedure turn maneuver as a flight plan leg and does not suspend (SUSP) flight plan execution at the IAF waypoint. The G1000 FMS/GPS provides an outbound heading for the procedure turn and prompts "BEGIN PROCEDURE TURN" at approximately one minute beyond the IAF. The pilot must turn away from the final approach course to start procedure turn either manually or must select the KAP 140 Autopilot HDG mode and set the HDG bug on the PFD to command the Autopilot to turn to the new heading. Following course reversal (inbound to join the final approach course), the G1000 FMS/GPS sequences to capture the final approach course. The pilot must intercept and join the final approach course manually or select the KAP 140 Autopilot APR mode to enable automatic capture the final approach course.

GPS or RNAV(GPS) approaches are managed by the G1000 FMS/GPS to provide course guidance and waypoint sequencing through the approach procedure. For ILS approaches, the G1000 FMS/GPS provides course guidance for the KAP 140 to capture the final approach course. The G1000 will tune the NAV 1 radio to the applicable facility frequency (with identifier) and set the course pointer to the final approach course. Within approximately 0.5 nm of the final approach course, the G1000 FMS/GPS will automatically change the HSI navigation source from GPS to NAV1. The change from GPS to NAV1 will make the KAP 140 change from NAV, APR or APR ARM mode to ROL mode operation and allow the airplane to fly through the final approach course, if not corrected. The pilot must manually set APR mode again to make the KAP 140 lock on the final approach course and the glideslope using the VHF NAV1 signal. If using radar vectors to navigate with the KAP 140 engaged in HDG mode to the ILS final approach course, wait until the G1000 changes the HSI navigation source to NAV1 before the KAP 140 is set to APR mode to avoid KAP 140 ROL mode reversion.

(Continued Next Page)

HOLDING, PROCEDURE TURNS AND MISSED APPROACHES (Continued)

WARNING

WHEN THE KAP 140 AUTOPILOT IS ENGAGED IN NAV, APR OR REV OPERATING MODES, IF THE HSI NAVIGATION SOURCE IS CHANGED FROM GPS TO NAV1 AUTOMATICALLY OR MANUALLY (USING THE CDI SOFTKEY) OR MANUALLY FROM NAV2 TO GPS, THE CHANGE WILL INTERRUPT THE NAVIGATION SIGNAL TO THE AUTOPILOT AND WILL CAUSE THE AUTOPILOT TO REVERT TO ROL MODE OPERATION. NO WARNING CHIME OR PFD ANNUNCIATION IS PROVIDED. THE PREVIOUSLY SELECTED MODE SYMBOL SHOWN ON THE AUTOPILOT DISPLAY WILL BE FLASHING TO SHOW THE REVERSION TO ROL MODE OPERATION. IN ROL MODE, THE AUTOPILOT WILL ONLY KEEP THE WINGS LEVEL AND WILL NOT CORRECT THE AIRPLANE HEADING OR COURSE. SET THE HDG BUG TO THE CORRECT HEADING AND SELECT THE CORRECT NAVIGATION SOURCE ON THE HSI USING THE CDI SOFTKEY BEFORE ENGAGING THE AUTOPILOT IN ANY OTHER OPERATING MODE.

Other VHF NAV-based Instrument Approach Procedures (VOR, LOC, LOC BC) require the pilot to manually tune and identify the NAV facility, select the corresponding NAV source on the HSI and set the HSI course pointer to the final approach course. See the G1000 Cockpit Reference Guide for additional information.

On reaching the Missed Approach Point (MAP), the G1000 FMS/GPS will automatically go into suspend (SUSP) mode but will continue to provide course guidance along the extended runway centerline. After the pilot stabilizes the airplane in climb, SUSP mode may be deselected using the SUSP softkey and the G1000 FMS/GPS will provide course guidance to the Missed Approach Holding Point (MAHP). On reaching the MAHP, the pilot may elect to hold (as noted above) or may select another IAP. See the G1000 Cockpit Reference Guide for additional information.

LANDING

NORMAL LANDING

Normal landing approaches can be made with power on or power off with any flap setting within the flap airspeed limits. Surface winds and air turbulence are usually the primary factors in determining the most comfortable approach speeds. Steep slips with flap settings greater than 20° can cause a slight tendency for the elevator to oscillate under certain combinations of airspeed, sideslip angle, and center of gravity loadings.

Landing at slower speeds will result in shorter landing distances and minimum wear to tires and brakes. Power must be at idle as the main wheels touch the ground. The main wheels must touch the ground before the nosewheel. The nosewheel must be lowered to the runway carefully after the speed has diminished to avoid unnecessary nose gear loads. This procedure is very important for rough or soft field landings.

SHORT FIELD LANDING

For a short field landing in smooth air conditions, approach at 61 KIAS with FULL flaps using enough power to control the glide path. (Slightly higher approach speeds should be used in turbulent air conditions.) After all approach obstacles are cleared, smoothly reduce power and hold the approach speed by lowering the nose of the airplane. The main wheels must touch the ground before the nose wheel with power at idle. Immediately after the main wheels touch the ground, carefully lower the nose wheel and apply heavy braking as required. For maximum brake performance, retract the flaps, hold the control wheel full back, and apply maximum brake pressure without skidding the tires.

(Continued Next Page)

LANDING (Continued)

CROSSWIND LANDING

When landing in a strong crosswind, use the minimum flap setting required for the field length. If flap settings greater than 20° are used in sideslips with full rudder deflection, some elevator oscillation may be felt at normal approach speeds. However, this does not affect control of the airplane. Although the crab or combination method of drift correction may be used, the wing low method gives the best control. After touchdown, hold a straight course with the steerable nosewheel, with aileron deflection as applicable, and occasional braking if necessary.

The maximum allowable crosswind velocity is dependent upon pilot capability as well as airplane limitations. Operation in direct crosswinds of 15 knots has been demonstrated (not an operating limitation).

BALKED LANDING

In a balked landing (go-around) climb, reduce the flap setting to 20° immediately after full power is applied and climb at 60 KIAS. If obstacles must be cleared during the go-around climb, reduce the wing flap setting to 10° and maintain a safe airspeed until the obstacles are cleared. Above 3000 feet pressure altitude, lean the mixture to obtain maximum RPM. After clearing any obstacles, carefully retract the flaps and allow the airplane to accelerate to normal climb airspeed.

COLD WEATHER OPERATION

Special consideration should be given to the operation of the airplane fuel system during the winter season or prior to any flight in cold temperatures. Proper preflight draining of the fuel system is especially important and will eliminate any free water accumulation. The use of additives such as isopropyl alcohol or diethylene glycol monomethyl ether may also be desirable. Refer to Section 8 for information on the proper use of additives.

Cold weather often causes conditions which require special care during airplane operations. **Even small accumulations of frost, ice, or snow must be removed, particularly from wing, tail and all control surfaces to assure satisfactory flight performance and handling.** Also, control surfaces must be free of any internal accumulations of ice or snow.

If snow or slush covers the takeoff surface, allowance must be made for takeoff distances which will be increasingly extended as the snow or slush depth increases. The depth and consistency of this cover can, in fact, prevent takeoff in many instances.

STARTING

When air temperatures are below 20°F (-6°C), use an external preheater and an external power source whenever possible to obtain positive starting and to reduce wear and abuse to the engine and electrical system. Preheat will thaw the oil trapped in the oil cooler, which probably will be congealed prior to starting in extremely cold temperatures.

WARNING

WHEN TURNING THE PROPELLER BY HAND, TREAT IT AS IF THE MAGNETOS SWITCH IS IN THE ON POSITION. A LOOSE OR BROKEN GROUND WIRE ON EITHER MAGNETO COULD ENERGIZE THE ENGINE.

(Continued Next Page)

COLD WEATHER OPERATIONS (Continued)

Prior to starting on cold mornings, it is advisable to turn the propeller manually through several engine compression cycles by hand to loosen the oil, so the engine cranks (motors) more easily and uses less battery power. When the propeller is turned manually, turn it in the opposite direction to normal engine rotation for greater safety. Opposite rotation disengages the magneto impulse couplings and prevents possible unwanted ignition.

When using an external power source, the MASTER switch ALT and BAT sections must be in the OFF position before connecting the external power source to the airplane receptacle. Refer to Section 7, Ground Service Plug Receptacle, for external power source operations.

Cold weather starting procedures are the same as the normal starting procedures. However, to conserve battery power the beacon light can be left off until the engine is started. Use caution to prevent inadvertent forward movement of the airplane during starting when parked on snow or ice.

NOTE

If the engine does not start during the first few attempts, or if engine firing diminishes in strength, the spark plugs may be frosted over. Preheat must be used before another start is attempted.

During cold weather operations, the oil temperature indicator may not be in the green arc prior to takeoff if outside air temperatures are very cold. After a suitable warm up period (2 to 5 minutes at 1000 RPM), accelerate the engine several times to higher engine RPM. If the engine accelerates smoothly and the oil pressure remains normal and steady, the airplane is ready for takeoff.

WINTERIZATION KIT

An optional winterization kit is available and may be utilized when cold weather operations are conducted. Refer to Section 9, Supplement 4 for installation and operational details.

HOT WEATHER OPERATION

Refer to the general warm temperature starting information under Starting Engine in this section. Avoid prolonged engine operation on the ground.

NOISE CHARACTERISTICS AND NOISE REDUCTION

The certified takeoff noise level for the Model 172S at 2550 pounds maximum weight is 75.1 dB(A) per 14CFR36 Appendix G (through Amendment 36-21) and 78.2 dB(A) per ICAO Annex 16 Chapter 10 (through Amendment 4). No determination has been made that the noise levels of this airplane are or should be acceptable or unacceptable for operation at, into, or out of, any airport.

The following procedures are suggested to minimize the effect of airplane noise on the public:

1. Pilots operating airplanes under VFR over outdoor assemblies of persons, recreational and park areas, and other noise sensitive areas should make every effort to fly not less than 2000 feet above the surface, weather permitting, even though flight at a lower level may be consistent with the provisions of government regulations.

2. During departure from or approach to an airport, climb after takeoff and descent for landing should be made so as to avoid prolonged flight at low altitude near noise sensitive areas.

NOTE

The above recommended procedures do not apply where they would conflict with Air Traffic Control clearances or instructions, or where, in the pilot's judgment, an altitude of less than 2000 feet is necessary to adequately exercise the duty to see and avoid other airplanes.

PERFORMANCE

TABLE OF CONTENTS

Page

Introduction 5-3
Use of Performance Charts 5-3
Sample Problem 5-3
Takeoff 5-4
Cruise 5-5
Fuel Required 5-6
Landing 5-8
Demonstrated Operating Temperature 5-8
Airspeed Calibration - Normal Static Source 5-9
Airspeed Calibration - Alternate Static Source 5-10
Temperature Conversion Chart 5-11
Stall Speeds at 2550 Pounds 5-12
Crosswind Components 5-13
Short Field Takeoff Distance at 2550 Pounds 5-14
Short Field Takeoff Distance at 2400 Pounds 5-15
Short Field Takeoff Distance at 2200 Pounds 5-16
Maximum Rate Of Climb at 2550 Pounds 5-17
Time, Fuel, And Distance To Climb at 2550 Pounds 5-18
Cruise Performance 5-19
Range Profile 5-21
Endurance Profile 5-22
Short Field Landing Distance at 2550 Pounds 5-23/5-24

INTRODUCTION

Performance data charts on the following pages are presented so that you may know what to expect from the airplane under various conditions, and also, to facilitate the planning of flights in detail and with reasonable accuracy. The data in the charts has been computed from actual flight tests with the airplane and engine in good condition and approximating average piloting techniques.

It should be noted that performance information presented in the range and endurance profile charts allows for 45 minutes reserve fuel at the specified power setting. Fuel flow data for cruise is based on the recommended lean mixture setting at all altitudes. Some indeterminate variables such as mixture leaning technique, fuel metering characteristics, engine and propeller condition, and air turbulence may account for variations of 10% or more in range and endurance. Therefore, it is important to utilize all available information to estimate the fuel required for the particular flight and to flight plan in a conservative manner.

USE OF PERFORMANCE CHARTS

Performance data is presented in tabular or graphical form to illustrate the effect of different variables. Sufficiently detailed information is provided in the tables so that conservative values can be selected and used to determine the particular performance figure with reasonable accuracy.

SAMPLE PROBLEM

The following sample flight problem utilizes information from the various charts to determine the predicted performance data for a typical flight. Assume the following information has already been determined:

AIRPLANE CONFIGURATION:

Takeoff weight	2550 Pounds
Usable fuel	53 Gallons

(Continued Next Page)

SAMPLE PROBLEM (Continued)

TAKEOFF CONDITIONS:	
Field pressure altitude	1500 Feet
Temperature	28°C (16°C Above Standard)
Wind component	12 Knot Headwind
Field length	3500 Feet
CRUISE CONDITIONS:	
Total distance	360 Nautical Miles
Pressure altitude	7500 Feet
Temperature	16°C (16°C Above Standard)
Expected wind enroute	10 Knot Headwind
LANDING CONDITIONS:	
Field pressure altitude	2000 Feet
Temperature	25°C
Field length	3000 Feet

TAKEOFF

The takeoff distance chart, Figure 5-5, should be consulted, keeping in mind that distances shown are based on the short field technique. Conservative distances can be established by reading the chart at the next higher value of weight, altitude and temperature. For example, in this particular sample problem, the takeoff distance information presented for a weight of 2550 pounds, pressure altitude of 2000 feet and a temperature of 30°C should be used and results in the following:

Ground roll	1285 Feet
Total distance to clear a 50-foot obstacle	2190 Feet

These distances are well within the available takeoff field length. However, a correction for the effect of wind may be made based on Note 3 of the takeoff chart. The correction for a 12 knot headwind is:

$$\frac{12 \text{ Knots}}{9 \text{ Knots}} \times 10\% = 13\% \text{ Decrease}$$

(Continued Next Page)

TAKEOFF (Continued)

This results in the following distances, corrected for wind:

Ground roll, zero wind	1285
Decrease in ground roll (1285 feet X 13%)	-167
Corrected ground roll	1118 Feet
Total distance to clear a 50-foot obstacle, zero wind	2190
Decrease in total distance (2190 feet X 13%)	- 285
Corrected total distance to clear 50-foot obstacle	1905 Feet

CRUISE

The cruising altitude should be selected based on a consideration of trip length, winds aloft, and the airplane's performance. A typical cruising altitude and the expected wind enroute have been given for this sample problem. However, the power setting selection for cruise must be determined based on several considerations. These include the cruise performance characteristics presented in Figure 5-8, the range profile chart presented in Figure 5-9, and the endurance profile chart presented in Figure 5-10.

The relationship between power and range is illustrated by the range profile chart. Considerable fuel savings and longer range result when lower power settings are used. For this sample problem, a cruise power of approximately 65% will be used.

The cruise performance chart, Figure 5-8, is entered at 8000 feet pressure altitude and 20°C above standard temperature. These values most nearly correspond to the planned altitude and expected temperature conditions. The engine speed chosen is 2600 RPM, which results in the following:

Power	64%
True airspeed	117 Knots
Cruise fuel flow	8.9 GPH

FUEL REQUIRED

The total fuel requirement for the flight may be estimated using the performance information in Figure 5-7 and Figure 5-8. For this sample problem, Figure 5-7 shows that a climb from 2000 feet to 8000 feet requires 2.2 gallons of fuel. The corresponding distance during the climb is 15 nautical miles. These values are for a standard temperature and are sufficiently accurate for most flight planning purposes. However, a further correction for the effect of temperature may be made as noted on the climb chart. The approximate effect of a non-standard temperature is to increase the time, fuel, and distance by 10% for each 10°C above standard temperature, due to the lower rate of climb. In this case, assuming a temperature 16°C above standard (16°C - 0°C), the correction would be:

$$\frac{16°C}{10°C} \text{ X } 10\% = 16\% \text{ Increase}$$

With this factor included, the fuel **estimate** would be calculated as follows:

Fuel to climb, standard temperature	2.2
Increase due to non-standard temperature (2.2 X 16%)	0.4
Corrected fuel to climb	2.6 Gallons

Using a similar procedure for the distance to climb results in 18 nautical miles. (15 nm using chart + 2.4 nm to correct for higher than standard temperature = 17.4 nm. Rounded up to 18 nm.)

The resultant cruise distance is:

Total distance	360
Climb distance	-18
Cruise distance	342 nm

(Continued Next Page)

FUEL REQUIRED (Continued)

With an expected 10 knot headwind, the ground speed for cruise is predicted to be:

117
-10

107 Knots

Therefore, the time required for the cruise portion of the trip is:

$$\frac{342 \text{ Nautical Miles}}{107 \text{ Knots}} = 3.2 \text{ Hours}$$

The fuel required for cruise is:

3.2 hours X 8.9 gallons/hour = 28.5 Gallons

A 45-minute reserve requires:

$$\frac{45}{60} \text{ X 8.9 gallons / hour} = 6.7 \text{ Gallons}$$

The total estimated fuel required is as follows:

Engine start, taxi, and takeoff	1.4
Climb	2.6
Cruise	28.5
Reserve	6.7
Total fuel required	39.2 Gallons

Once the flight is underway, ground speed checks will provide a more accurate basis for estimating the time enroute and the corresponding fuel required to complete the trip with ample reserve.

LANDING

A procedure similar to takeoff should be used for estimating the landing distance at the destination airport. Figure 5-11 presents landing distance information for the short field technique. The distances corresponding to 2000 feet and 30°C are as follows:

Ground roll	650 Feet
Total distance to clear a 50-foot obstacle	1455 Feet

A correction for the effect of wind may be made based on Note 2 of the landing chart, using the same procedure as outlined for takeoff.

DEMONSTRATED OPERATING TEMPERATURE

Satisfactory engine cooling has been demonstrated for this airplane with an outside air temperature 23°C above standard. This is not to be considered as an operating limitation. Reference should be made to Section 2 for engine operating limitations.

AIRSPEED CALIBRATION

NORMAL STATIC SOURCE

CONDITION:
Power required for level flight or maximum power descent.

FLAPS UP												
KIAS	50	60	70	80	90	100	110	120	130	140	150	160
KCAS	56	62	70	78	87	97	107	117	127	137	147	157
FLAPS 10°												
KIAS	40	50	60	70	80	90	100	110	- - -	- - -	- - -	- - -
KCAS	51	57	63	71	80	89	99	109	- - -	- - -	- - -	- - -
FLAPS FULL												
KIAS	40	50	60	70	80	85	- - -	- - -	- - -	- - -	- - -	- - -
KCAS	50	56	63	72	81	86	- - -	- - -	- - -	- - -	- - -	- - -

Figure 5-1. Airspeed Calibration (Sheet 1 of 2)

AIRSPEED CALIBRATION

ALTERNATE STATIC SOURCE

CONDITION:
Power required for level flight or maximum power descent.

FLAPS UP												
KIAS	50	60	70	80	90	100	110	120	130	140	150	160
KCAS	56	62	68	76	85	95	105	115	125	134	144	154
FLAPS 10°												
KIAS	40	50	60	70	80	90	100	110	- - -	- - -	- - -	- - -
KCAS	51	55	60	68	77	86	96	105	- - -	- - -	- - -	- - -
FLAPS FULL												
KIAS	40	50	60	70	80	85	- - -	- - -	- - -	- - -	- - -	- - -
KCAS	49	54	61	69	78	83	- - -	- - -	- - -	- - -	- - -	- - -

NOTE

Windows closed, ventilators closed, cabin heater, cabin air, and defroster on maximum.

Figure 5-1. Airspeed Calibration (Sheet 2)

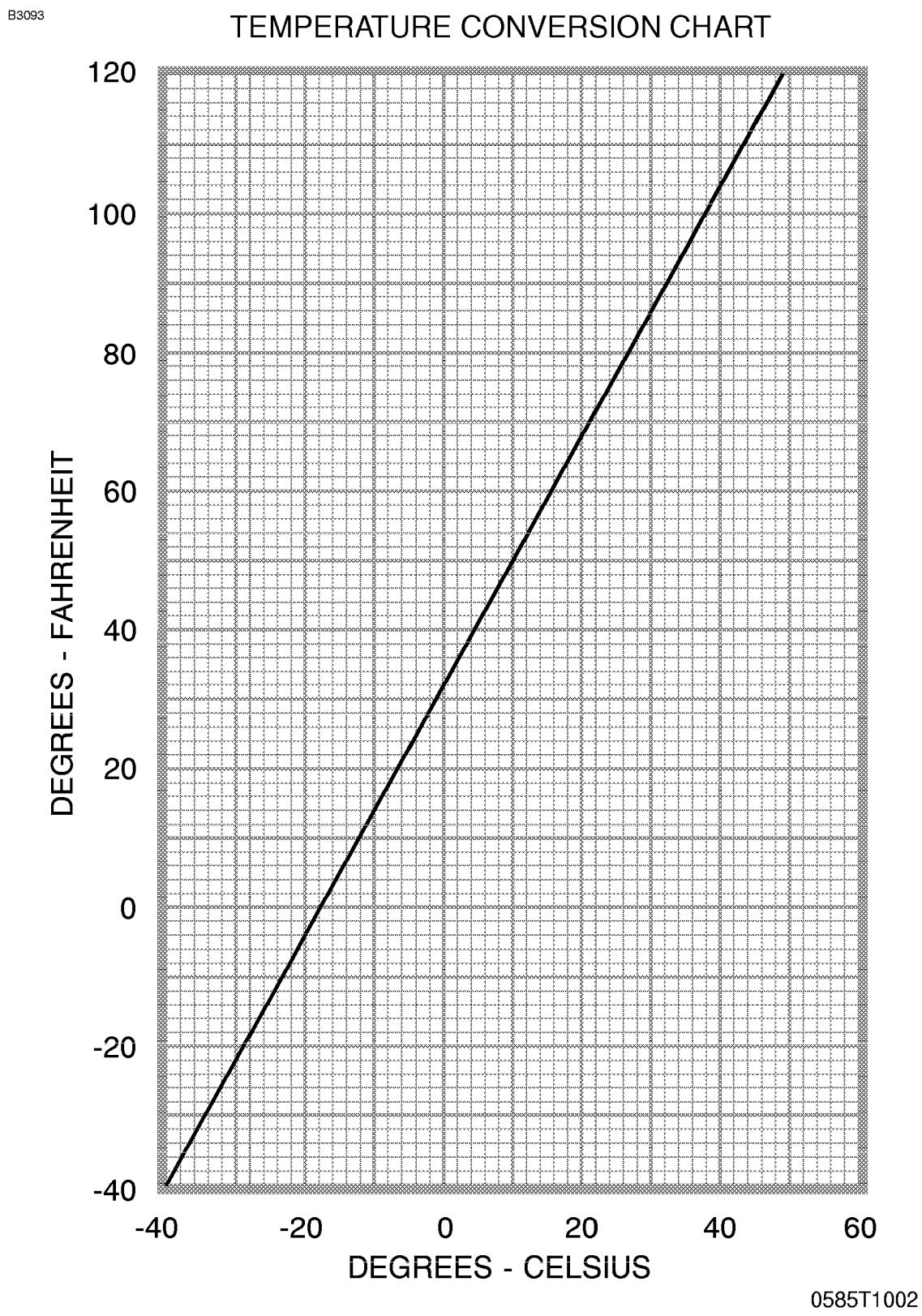

Figure 5-2. Temperature Conversion Chart

STALL SPEEDS AT 2550 POUNDS

CONDITIONS:
Power Off

MOST REARWARD CENTER OF GRAVITY

FLAP SETTING	ANGLE OF BANK							
	0°		30°		45°		60°	
	KIAS	KCAS	KIAS	KCAS	KIAS	KCAS	KIAS	KCAS
UP	48	53	52	57	57	63	68	75
10°	42	50	45	54	50	59	59	71
FULL	40	48	43	52	48	57	57	68

MOST FORWARD CENTER OF GRAVITY

FLAP SETTING	ANGLE OF BANK							
	0°		30°		45°		60°	
	KIAS	KCAS	KIAS	KCAS	KIAS	KCAS	KIAS	KCAS
UP	48	53	52	57	57	63	68	75
10°	43	51	46	55	51	61	61	72
FULL	40	48	43	52	48	57	57	68

NOTE

- Altitude loss during a stall recovery may be as much as 230 feet.
- KIAS values are approximate.

Figure 5-3. Stall Speeds

CROSSWIND COMPONENT

B3094

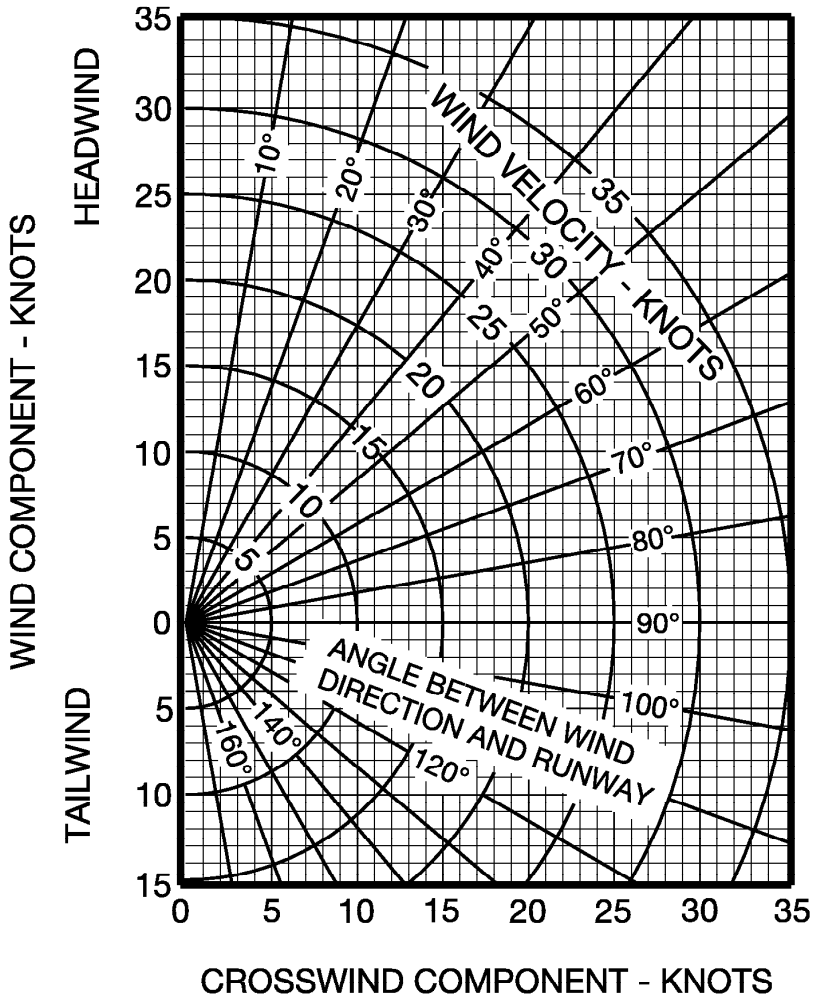

NOTE

Maximum demonstrated crosswind velocity is 15 knots (not a limitation).

0585T1003

Figure 5-4. Crosswind Components

SHORT FIELD TAKEOFF DISTANCE AT 2550 POUNDS

CONDITIONS:

Flaps 10°
Full Throttle Prior to Brake Release
Paved, level, dry runway

Zero Wind
Lift Off: 51 KIAS
Speed at 50 Ft: 56 KIAS

Press Alt In Feet	0°C		10°C		20°C		30°C		40°C	
	Grnd Roll Ft	Total Ft To Clear 50 Ft Obst	Grnd Roll Ft	Total Ft To Clear 50 Ft Obst	Grnd Roll Ft	Total Ft To Clear 50 Ft Obst	Grnd Roll Ft	Total Ft To Clear 50 Ft Obst	Grnd Roll Ft	Total Ft To Clear 50 Ft Obst
S. L.	860	1465	925	1575	995	1690	1070	1810	1150	1945
1000	940	1600	1010	1720	1090	1850	1170	1990	1260	2135
2000	1025	1755	1110	1890	1195	2035	1285	2190	1380	2355
3000	1125	1925	1215	2080	1310	2240	1410	2420	1515	2605
4000	1235	2120	1335	2295	1440	2480	1550	2685	1660	2880
5000	1355	2345	1465	2545	1585	2755	1705	2975	1825	3205
6000	1495	2605	1615	2830	1745	3075	1875	3320	2010	3585
7000	1645	2910	1785	3170	1920	3440	2065	3730	2215	4045
8000	1820	3265	1970	3575	2120	3880	2280	4225	2450	4615

NOTE

- Short field technique as specified in Section 4.
- Prior to takeoff from fields above 3000 feet elevation, the mixture should be leaned to give maximum RPM in a full throttle, static runup.
- Decrease distances 10% for each 9 knots headwind. For operation with tail winds up to 10 knots, increase distances by 10% for each 2 knots.
- For operation on dry grass runway, increase distances by 15% of the “ground roll” figure.

Figure 5-5. Short Field Takeoff Distance (Sheet 1 of 3)

SHORT FIELD TAKEOFF DISTANCE AT 2400 POUNDS

CONDITIONS:

Flaps 10°
Full Throttle Prior to Brake Release
Paved, level, dry runway

Zero Wind
Lift Off: 48 KIAS
Speed at 50 Ft: 54 KIAS

Press Alt In Feet	0°C		10°C		20°C		30°C		40°C	
	Grnd Roll Ft	Total Ft To Clear 50 Ft Obst	Grnd Roll Ft	Total Ft To Clear 50 Ft Obst	Grnd Roll Ft	Total Ft To Clear 50 Ft Obst	Grnd Roll Ft	Total Ft To Clear 50 Ft Obst	Grnd Roll Ft	Total Ft To Clear 50 Ft Obst
S. L.	745	1275	800	1370	860	1470	925	1570	995	1685
1000	810	1390	875	1495	940	1605	1010	1720	1085	1845
2000	885	1520	955	1635	1030	1760	1110	1890	1190	2030
3000	970	1665	1050	1795	1130	1930	1215	2080	1305	2230
4000	1065	1830	1150	1975	1240	2130	1335	2295	1430	2455
5000	1170	2015	1265	2180	1360	2355	1465	2530	1570	2715
6000	1285	2230	1390	2410	1500	2610	1610	2805	1725	3015
7000	1415	2470	1530	2685	1650	2900	1770	3125	1900	3370
8000	1560	2755	1690	3000	1815	3240	1950	3500	2095	3790

NOTE

- Short field technique as specified in Section 4.
- Prior to takeoff from fields above 3000 feet elevation, the mixture should be leaned to give maximum RPM in a full throttle, static runup.
- Decrease distances 10% for each 9 knots headwind. For operation with tail winds up to 10 knots, increase distances by 10% for each 2 knots.
- For operation on dry grass runway, increase distances by 15% of the “ground roll” figure.

Figure 5-5. Short Field Takeoff Distance (Sheet 2)

SHORT FIELD TAKEOFF DISTANCE AT 2200 POUNDS

CONDITIONS:

Flaps 10°
Full Throttle Prior to Brake Release
Paved, level, dry runway

Zero Wind
Lift Off: 44 KIAS
Speed at 50 Ft: 50 KIAS

Press Alt In Feet	0°C		10°C		20°C		30°C		40°C	
	Grnd Roll Ft	Total Ft To Clear 50 Ft Obst	Grnd Roll Ft	Total Ft To Clear 50 Ft Obst	Grnd Roll Ft	Total Ft To Clear 50 Ft Obst	Grnd Roll Ft	Total Ft To Clear 50 Ft Obst	Grnd Roll Ft	Total Ft To Clear 50 Ft Obst
S. L.	610	1055	655	1130	705	1205	760	1290	815	1380
1000	665	1145	720	1230	770	1315	830	1410	890	1505
2000	725	1250	785	1340	845	1435	905	1540	975	1650
3000	795	1365	860	1465	925	1570	995	1685	1065	1805
4000	870	1490	940	1605	1010	1725	1090	1855	1165	1975
5000	955	1635	1030	1765	1110	1900	1195	2035	1275	2175
6000	1050	1800	1130	1940	1220	2090	1310	2240	1400	2395
7000	1150	1985	1245	2145	1340	2305	1435	2475	1540	2650
8000	1270	2195	1370	2375	1475	2555	1580	2745	1695	2950

NOTE

- Short field technique as specified in Section 4.
- Prior to takeoff from fields above 3000 feet elevation, the mixture should be leaned to give maximum RPM in a full throttle, static runup.
- Decrease distances 10% for each 9 knots headwind. For operation with tail winds up to 10 knots, increase distances by 10% for each 2 knots.
- For operation on dry grass runway, increase distances by 15% of the “ground roll” figure.

Figure 5-5. Short Field Takeoff Distance (Sheet 3)

MAXIMUM RATE OF CLIMB AT 2550 POUNDS

CONDITIONS:

Flaps Up
Full Throttle

PRESS ALT FT	CLIMB SPEED KIAS	RATE OF CLIMB - FPM			
		-20°C	0°C	20°C	40°C
S.L.	74	855	785	710	645
2000	73	760	695	625	560
4000	73	685	620	555	495
6000	73	575	515	450	390
8000	72	465	405	345	285
10,000	72	360	300	240	180
12,000	72	255	195	135	- - -

NOTE

Mixture leaned above 3000 feet elevation for maximum RPM.

Figure 5-6. Maximum Rate of Climb

TIME, FUEL AND DISTANCE TO CLIMB AT 2550 POUNDS

CONDITIONS:

Flaps Up
Full Throttle
Standard Temperature

PRESS ALT FT	CLIMB SPEED KIAS	RATE OF CLIMB FPM	FROM SEA LEVEL		
			TIME IN MIN	FUEL USED GAL	DIST NM
S.L.	74	730	0	0.0	0
1000	73	695	1	0.4	2
2000	73	655	3	0.8	4
3000	73	620	4	1.2	6
4000	73	600	6	1.5	8
5000	73	550	8	1.9	10
6000	73	505	10	2.2	13
7000	73	455	12	2.6	16
8000	72	410	14	3.0	19
9000	72	360	17	3.4	22
10,000	72	315	20	3.9	27
11,000	72	265	24	4.4	32
12,000	72	220	28	5.0	38

NOTE

- Add 1.4 gallons of fuel for engine start, taxi and takeoff allowance.
- Mixture leaned above 3000 feet elevation for maximum RPM.
- Increase time, fuel and distance by 10% for each 10°C above standard temperature.
- Distances shown are based on zero wind.

Figure 5-7. Time, Fuel and Distance to Climb

CRUISE PERFORMANCE

CONDITIONS:
2550 Pounds
Recommended Lean Mixture At All Altitudes (Refer to Section 4, Cruise)

PRESS ALT FT	RPM	20°C BELOW STANDARD TEMP			STANDARD TEMPERATURE			20°C ABOVE STANDARD TEMP		
		% MCP	KTAS	GPH	% MCP	KTAS	GPH	% MCP	KTAS	GPH
2000	2550	83	117	11.1	77	118	10.5	72	117	9.9
	2500	78	115	10.6	73	115	9.9	68	115	9.4
	2400	69	111	9.6	64	110	9.0	60	109	8.5
	2300	61	105	8.6	57	104	8.1	53	102	7.7
	2200	53	99	7.7	50	97	7.3	47	95	6.9
	2100	47	92	6.9	44	90	6.6	42	89	6.3
4000	2600	83	120	11.1	77	120	10.4	72	119	9.8
	2550	79	118	10.6	73	117	9.9	68	117	9.4
	2500	74	115	10.1	69	115	9.5	64	114	8.9
	2400	65	110	9.1	61	109	8.5	57	107	8.1
	2300	58	104	8.2	54	102	7.7	51	101	7.3
	2200	51	98	7.4	48	96	7.0	45	94	6.7
	2100	45	91	6.6	42	89	6.4	40	87	6.1
6000	2650	83	122	11.1	77	122	10.4	72	121	9.8
	2600	78	120	10.6	73	119	9.9	68	118	9.4
	2500	70	115	9.6	65	114	9.0	60	112	8.5
	2400	62	109	8.6	57	108	8.2	54	106	7.7
	2300	54	103	7.8	51	101	7.4	48	99	7.0
	2200	48	96	7.1	45	94	6.7	43	92	6.4

NOTE

Maximum cruise power using recommended lean mixture is 75% MCP. Values above 75% MCP are shown in table for interpolation purposes only. Operations above 75% MCP must use full rich mixture.

Figure 5-8. Cruise Performance (Sheet 1 of 2)

CRUISE PERFORMANCE

CONDITIONS:
2550 Pounds
Recommended Lean Mixture At All Altitudes (Refer to Secton 4, Cruise)

PRESS ALT FT	RPM	20°C BELOW STANDARD TEMP			STANDARD TEMPERATURE			20°C ABOVE STANDARD TEMP		
		% MCP	KTAS	GPH	% MCP	KTAS	GPH	% MCP	KTAS	GPH
8000	2700	83	125	11.1	77	124	10.4	71	123	9.7
	2650	78	122	10.5	72	122	9.9	67	120	9.3
	2600	74	120	10.0	68	119	9.4	64	117	8.9
	2500	65	114	9.1	61	112	8.6	57	111	8.1
	2400	58	108	8.2	54	106	7.8	51	104	7.4
	2300	52	101	7.5	48	99	7.1	46	97	6.8
	2200	46	94	6.8	43	92	6.5	41	90	6.2
10,000	2700	78	124	10.5	72	123	9.8	67	122	9.3
	2650	73	122	10.0	68	120	9.4	63	119	8.9
	2600	69	119	9.5	64	117	9.0	60	115	8.5
	2500	62	113	8.7	57	111	8.2	54	109	7.8
	2400	55	106	7.9	51	104	7.5	49	102	7.1
	2300	49	100	7.2	46	97	6.8	44	95	6.5
12,000	2650	69	121	9.5	64	119	8.9	60	117	8.5
	2600	65	118	9.1	61	116	8.5	57	114	8.1
	2500	58	111	8.3	54	109	7.8	51	107	7.4
	2400	52	105	7.5	49	102	7.1	46	100	6.8
	2300	47	98	6.9	44	95	6.6	41	92	6.3

NOTE

Maximum cruise power using recommended lean mixture is 75% MCP. Values above 75% MCP are shown in table for interpolation purposes only. Operations above 75% MCP must use full rich mixture.

Figure 5-8. Cruise Performance (Sheet 2)

RANGE PROFILE

45 MINUTES RESERVE 53 GALLONS USABLE FUEL

CONDITIONS:

2550 Pounds
Recommended Lean Mixture
for Cruise At All Altitudes

Standard Temperature
Zero Wind

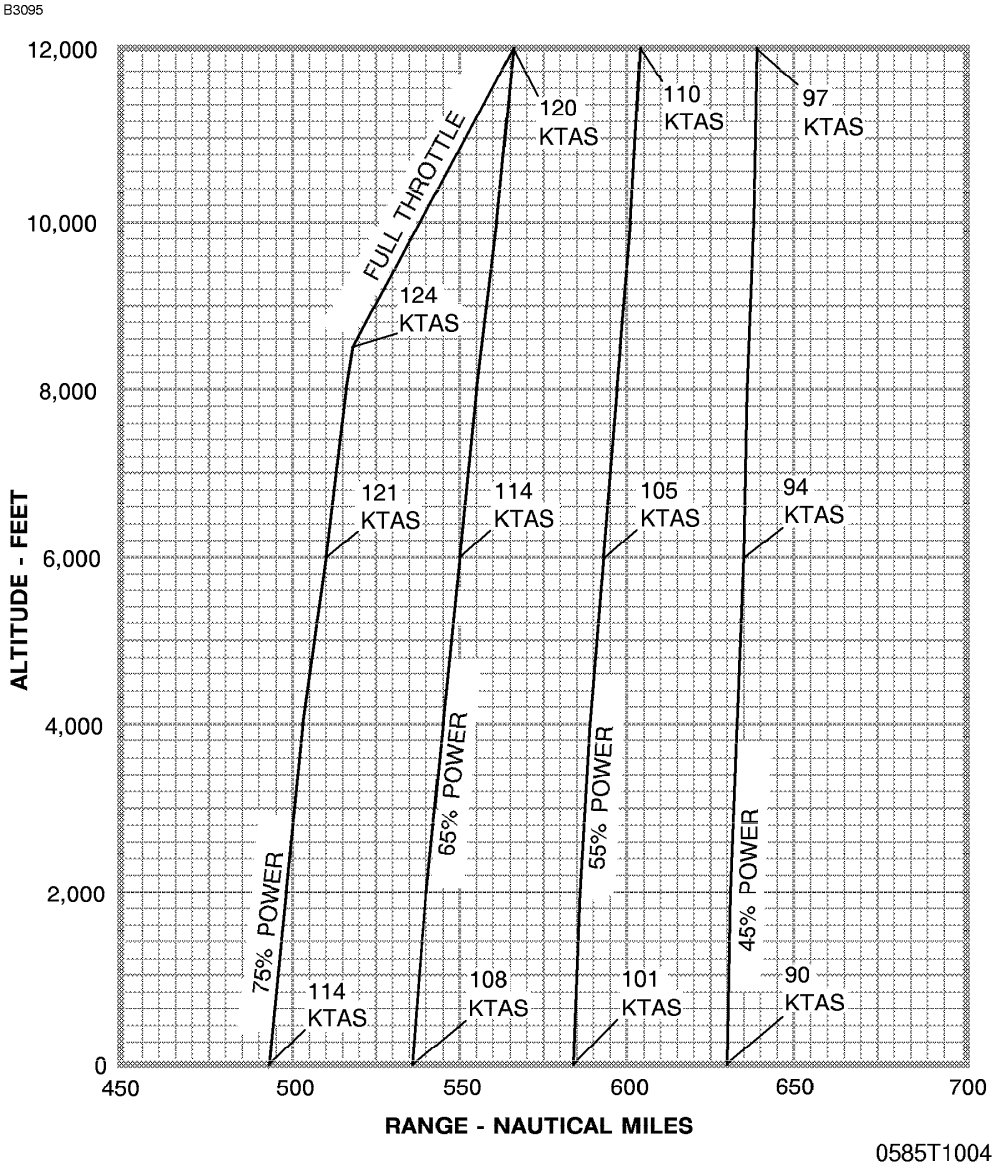

NOTE

This chart allows for the fuel used for engine start, taxi, takeoff and climb, and the distance during climb.

Figure 5-9. Range Profile

ENDURANCE PROFILE

45 MINUTES RESERVE 53 GALLONS USABLE FUEL

CONDITIONS:

2550 Pounds
Recommended Lean Mixture for Cruise At All Altitudes
Standard Temperature

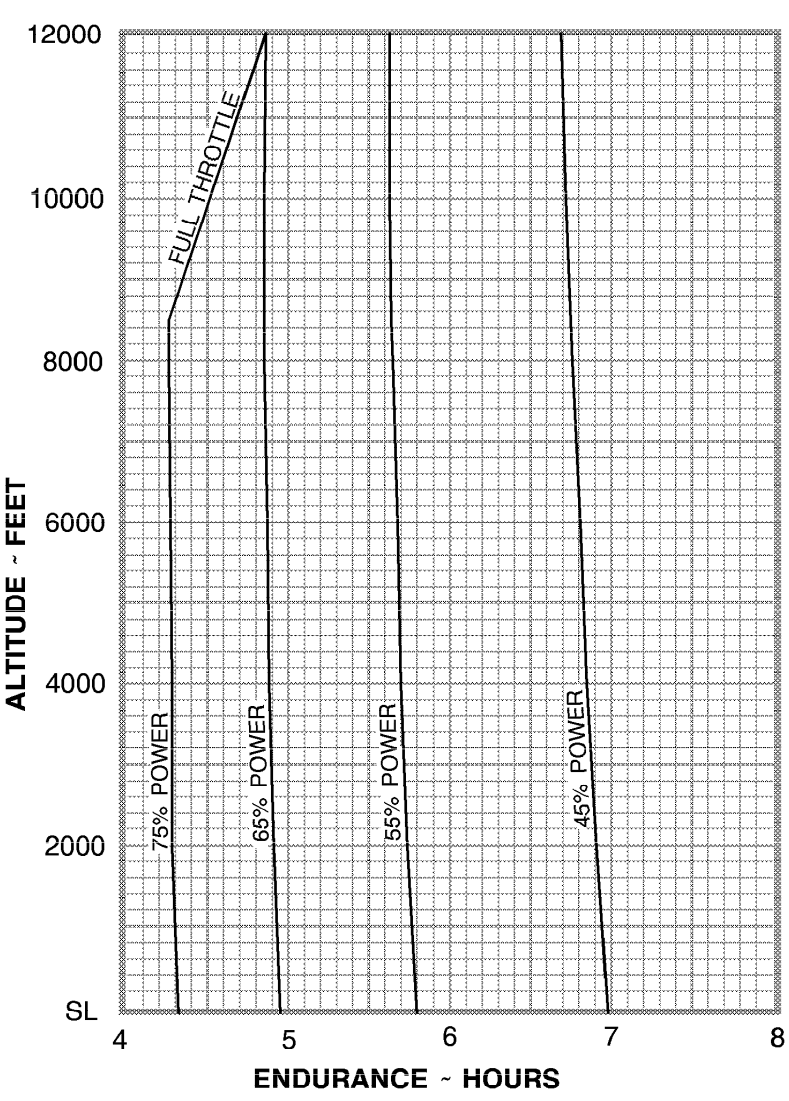

NOTE

This chart allows for the fuel used for engine start, taxi, takeoff and climb, and the time during climb.

Figure 5-10. Endurance Profile

SHORT FIELD LANDING DISTANCE AT 2550 POUNDS

CONDITIONS:

Flaps Full
Power Off
Maximum Braking

Paved, level, dry runway
Zero Wind
Speed at 50 Ft: 61 KIAS

Press Alt In Feet	0°C		10°C		20°C		30°C		40°C	
	Grnd Roll Ft	Total Ft To Clear 50 Ft Obst	Grnd Roll Ft	Total Ft To Clear 50 Ft Obst	Grnd Roll Ft	Total Ft To Clear 50 Ft Obst	Grnd Roll Ft	Total Ft To Clear 50 Ft Obst	Grnd Roll Ft	Total Ft To Clear 50 Ft Obst
S. L.	545	1290	565	1320	585	1350	605	1380	625	1415
1000	565	1320	585	1350	605	1385	625	1420	650	1450
2000	585	1355	610	1385	630	1420	650	1455	670	1490
3000	610	1385	630	1425	655	1460	675	1495	695	1530
4000	630	1425	655	1460	675	1495	700	1535	725	1570
5000	655	1460	680	1500	705	1535	725	1575	750	1615
6000	680	1500	705	1540	730	1580	755	1620	780	1660
7000	705	1545	730	1585	760	1625	785	1665	810	1705
8000	735	1585	760	1630	790	1670	815	1715	840	1755

NOTE

- Short field technique as specified in Section 4.
- Decrease distances 10% for each 9 knots headwind. For operation with tail winds up to 10 knots, increase distances by 10% for each 2 knots.
- For operation on dry grass runway, increase distances by 45% of the “ground roll” figure.
- If landing with flaps up, increase the approach speed by 9 KIAS and allow for 35% longer distances.

Figure 5-11. Short Field Landing Distance

WEIGHT AND BALANCE/ EQUIPMENT LIST

TABLE OF CONTENTS

	Page
Introduction	6-3
Airplane Weighing Procedures	6-3
Airplane Weighing Form	6-5
Sample Weight and Balance Record	6-7
Weight And Balance	6-8
Baggage Tiedown	6-9
Sample Loading Problem	6-10
Loading Graph	6-12
Loading Arrangements	6-13
Internal Cabin Dimensions	6-14
Center-of-Gravity Moment Envelope	6-15
Center-of-Gravity Limits	6-16
Comprehensive Equipment List	6-17

INTRODUCTION

This section describes the procedure for establishing the basic empty weight and moment of the airplane. Sample forms are provided for reference. Procedures for calculating the weight and moment for various operations are also provided. For additional information regarding Weight and Balance procedures, refer to the Aircraft Weight and Balance Handbook (FAA-H-8083-1). A comprehensive list of Cessna equipment available for this airplane is included at the back of this section.

Specific information regarding the weight, arm, moment and installed equipment for this airplane as delivered from the factory can be found in the plastic envelope in the back of this handbook.

WARNING

IT IS THE RESPONSIBILITY OF THE PILOT TO MAKE SURE THE AIRPLANE IS LOADED PROPERLY. OPERATION OUTSIDE OF PRESCRIBED WEIGHT AND BALANCE LIMITATIONS COULD RESULT IN AN ACCIDENT AND SERIOUS OR FATAL INJURY.

AIRPLANE WEIGHING PROCEDURES

1. Preparation:
   a. Inflate tires to recommended operating pressures.
   b. Defuel airplane. Refer to the Maintenance Manual.
   c. Service engine oil as required to obtain a normal full indication (approximately 7 quarts on dipstick).
   d. Move sliding seats to the most forward position.
   e. Raise flaps to the fully retracted position.
   f. Place all control surfaces in neutral position.
   g. Remove all non-required items from airplane.

AIRPLANE WEIGHING PROCEDURES (Continued)

2. Level:
   a. Place scales under each wheel (minimum scale capacity, 1000 pounds).
   b. Deflate the nose tire and/or lower or raise the nose strut to properly center the bubble in the level (refer to Figure 6-1).
3. Weigh:
   a. Weigh airplane in a closed hangar to avoid errors caused by air currents.
   b. With the airplane level and brakes released, record the weight shown on each scale. Deduct the tare, if any, from each reading.
4. Measure:
   a. Obtain measurement A by measuring horizontally (along the airplane centerline) from a line stretched between the main wheel centers to a plumb bob dropped from the firewall.
   b. Obtain measurement B by measuring horizontally and parallel to the airplane centerline, from center of nose wheel axle, left side, to a plumb bob dropped from the line between the main wheel centers. Repeat on right side and average the measurements.
5. Using weights from step 3 and measurements from step 4, the Basic Empty Weight and C.G. can be determined by completing Figure 6-1.
6. Changes to the Airplane Weight and Balance due to alteration or repair must be documented in a permanent record within the POH similar to that shown in Figure 6-2.
7. A new Basic Empty Weight and CG Arm based on actual airplane weight (as weighed) is required after a major repair or alteration. It is recommended that the airplane be weighed to verify Basic Empty Weight and CG Arm at intervals not to exceed 5 years.

(Continued Next Page)

AIRPLANE WEIGHING FORM

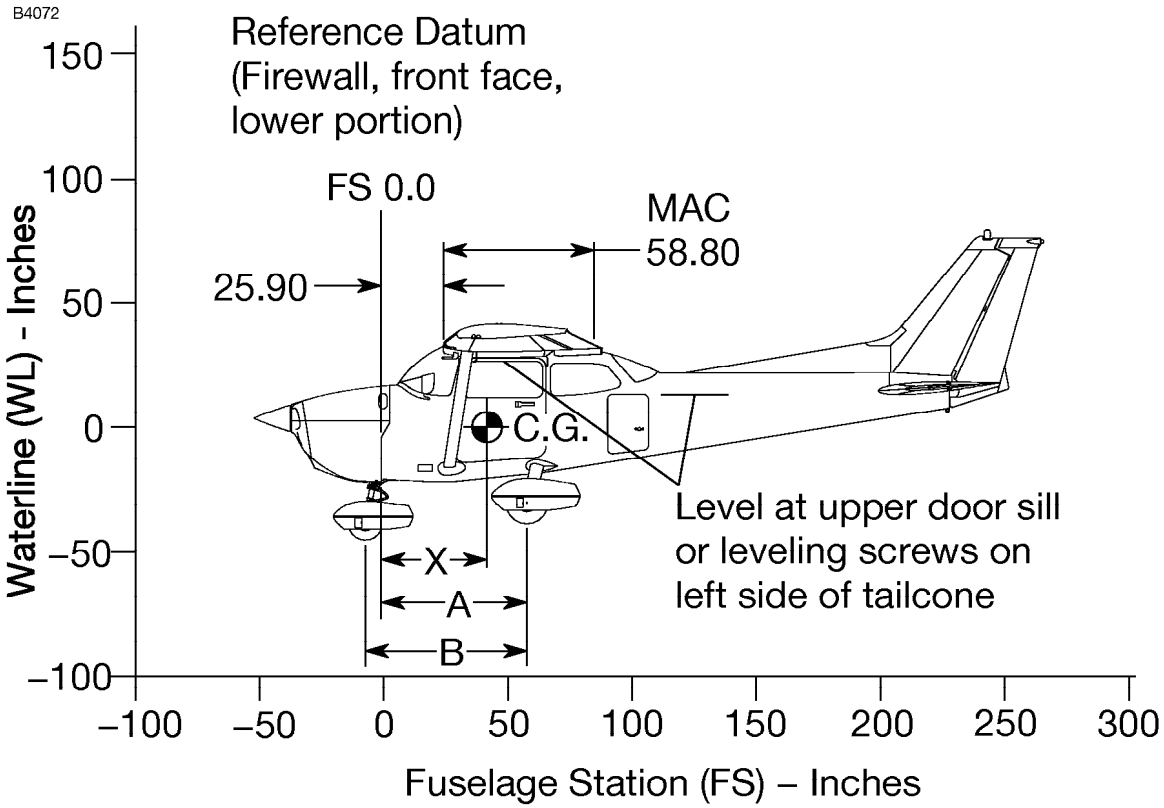

NOTE

It is the responsibility of the pilot to make sure that the airplane is loaded properly.

0510T1005

Figure 6-1 (Sheet 1 of 2)

AIRPLANE WEIGHING FORM

B4073

Locating CG with Airplane on Landing Gear

$$X \text{ (Inches Aft of Datum)} = A - \left[\frac{\text{Nosewheel Weight x B}}{\text{Total Weight*}}\right]$$

*(Nose + L + R Wheel Weights)

Locating Percent MAC

$$\text{CG Percent MAC} = \frac{\text{(CG Arm of Airplane)} - 25.90}{0.5880}$$

Measuring A and B

Measure A and B per pilot's operating handbook instructions to assist in locating CG with airplane weighed on landing gear.

Leveling Provisions

Longitudinal – Left side of tailcone at FS 108.00 and 142.00

Airplane as Weighed Table

Position	Scale reading	Scale drift	Tare	Net weight
Left Wheel				
Right Wheel				
Nose Wheel				
Airplane total as weighed				

Basic Empty Weight and Center–of–Gravity Table

Item	Weight Pounds	CG Arm (Inches)	Moment (Inch–Pounds /1000)
Airplane (calculated or as weighed) (includes all undrainable fluids and full oil)			
Drainable unusable fuel at 6.0 pounds per gallon – (3 gallons)	18.0	46.00	0.83
Basic Empty Weight			

Figure 6-1 (Sheet 2)

SAMPLE WEIGHT AND BALANCE RECORD

B3099

SAMPLE WEIGHT AND BALANCE RECORD

(Continuous history of changes in structure or equipment affecting weight and balance)

Airplane model				Serial number					Page number			
Date	Item no. In	Item no. Out	Description of article or modification	Weight change Added (+) WT. (lb.)	Added (+) Arm (in.)	Added (+) Moment /1000	Removed (-) WT. (lb.)	Removed (-) Arm (in.)	Removed (-) Moment /1000	Running basic empty weight WT. (lb.)	Running basic empty weight Moment /1000
			As delivered								

0585T1009

Figure 6-2

WEIGHT AND BALANCE

The following information will enable you to operate your Cessna within the prescribed weight and center-of-gravity limitations. To determine weight and balance, use the Sample Loading Problem (Figure 6-3), Loading Graph (Figure 6-4), and Center-of-Gravity Moment Envelope (Figure 6-7) as follows:

Enter the appropriate basic empty weight and moment/1000 from the weight and balance records for your airplane in the YOUR AIRPLANE column of the Sample Loading Problem.

NOTE

In addition to the basic empty weight and moment noted on these records, the C.G. arm (FS) is also shown, but need not be used on the Sample Loading Problem. The moment which is shown must be divided by 1000 and this value used as the moment/1000 on the loading problem.

Use the Loading Graph to determine the moment/1000 for each additional item to be carried; then list these on the loading problem.

NOTE

Loading Graph information for the pilot, passengers and baggage is based on seats positioned for average occupants and baggage loaded in the center of the baggage areas as shown on the Loading Arrangements diagram. For loadings which may differ from these, the Sample Loading Problem lists fuselage stations (FS) for these items to indicate their forward and aft C.G. range limitations (seat travel and baggage area limitation). Refer to Figures 6-5 and 6-6 for additional loading information. Additional moment calculations, based on the actual weight and C.G. arm (FS) of the item being loaded, must be made if the position of the load is different from that shown on the Loading Graph.

(Continued Next Page)

WEIGHT AND BALANCE (Continued)

Total the weights and moments/1000 and plot these values on the Center of Gravity Moment Envelope to determine whether the point falls within the envelope, and if the loading is acceptable.

BAGGAGE TIEDOWN

A nylon baggage net having four tiedown straps is provided as standard equipment to secure baggage on the cabin floor aft of the rear seat (baggage area A) and in the aft baggage area (baggage area B). Six eyebolts serve as attaching points for the net. Two eyebolts for the forward tiedown straps are mounted on the cabin floor near each sidewall just forward of the baggage door approximately at station FS 90; two eyebolts are installed on the cabin floor slightly inboard of each sidewall approximately at FS 107; and two eyebolts are located below the aft window near each sidewall approximately at FS 107. A placard on the baggage door defines the weight limitations in the baggage areas.

When baggage area A is utilized for baggage only, the two forward floor mounted eyebolts and the two aft floor mounted eyebolts (or the two eyebolts below the aft window) may be used, depending on the height of the baggage. When baggage is carried in the baggage area B only, the aft floor mounted eyebolts and the eyebolts below the aft window should be used. When baggage is loaded in both areas, all six eyebolts should be utilized.

SAMPLE LOADING PROBLEM

ITEM DESCRIPTION	WEIGHT AND MOMENT TABULATION			
	SAMPLE AIRPLANE		YOUR AIRPLANE	
	Weight (Lbs.)	Moment (Lb-ins. /1000)	Weight (Lbs.)	Moment (Lb-ins. /1000)
1. Basic Empty Weight (Use the data pertaining to your airplane as it is presently equipped. Includes unusable fuel and full oil)	1642	62.6		
2. Usable Fuel (At 6 Lbs./Gal.)				
Standard Fuel 53 Gallons Maximum				
Reduced Fuel (30 Gallons)	180	8.6		
3. Pilot and Front Passenger (FS 32 to 50)	340	12.6		
4. Rear Passengers (FS 74)	340	24.8		
5.* Baggage "A" (FS 82 to 108) 120 Pounds Maximum	56	4.6		
6.* Baggage "B" (FS 108 to 142) 50 Pounds Maximum				
7. **RAMP WEIGHT AND MOMENT**	2558	113.2		
8. Fuel allowance for engine start, taxi and runup	-8.0	-0.4		
9. **TAKEOFF WEIGHT AND MOMENT** (Subtract Step 8 from Step 7)	2550	112.8		

10. Locate this point (2550 at 112.8) on the Center-of-Gravity Moment Envelope, and since this point falls within the envelope, the loading is acceptable.

* The maximum allowable combined weight capacity for baggage in areas A and B is 120 pounds.

Figure 6-3 (Sheet 1 of 2)

SAMPLE LOADING PROBLEM

YOUR AIRPLANE	
Weight (lbs.)	Moment (Lb-ins, /1000)

YOUR AIRPLANE	
Weight (lbs.)	Moment (Lb-ins, /1000)

YOUR AIRPLANE	
Weight (lbs.)	Moment (Lb-ins, /1000)

When several loading configurations are representative of your operations, it may be useful to fill out one or more of the above columns so that specific loadings are available at a glance.

Figure 6-3 (Sheet 2)

LOADING GRAPH

B4074

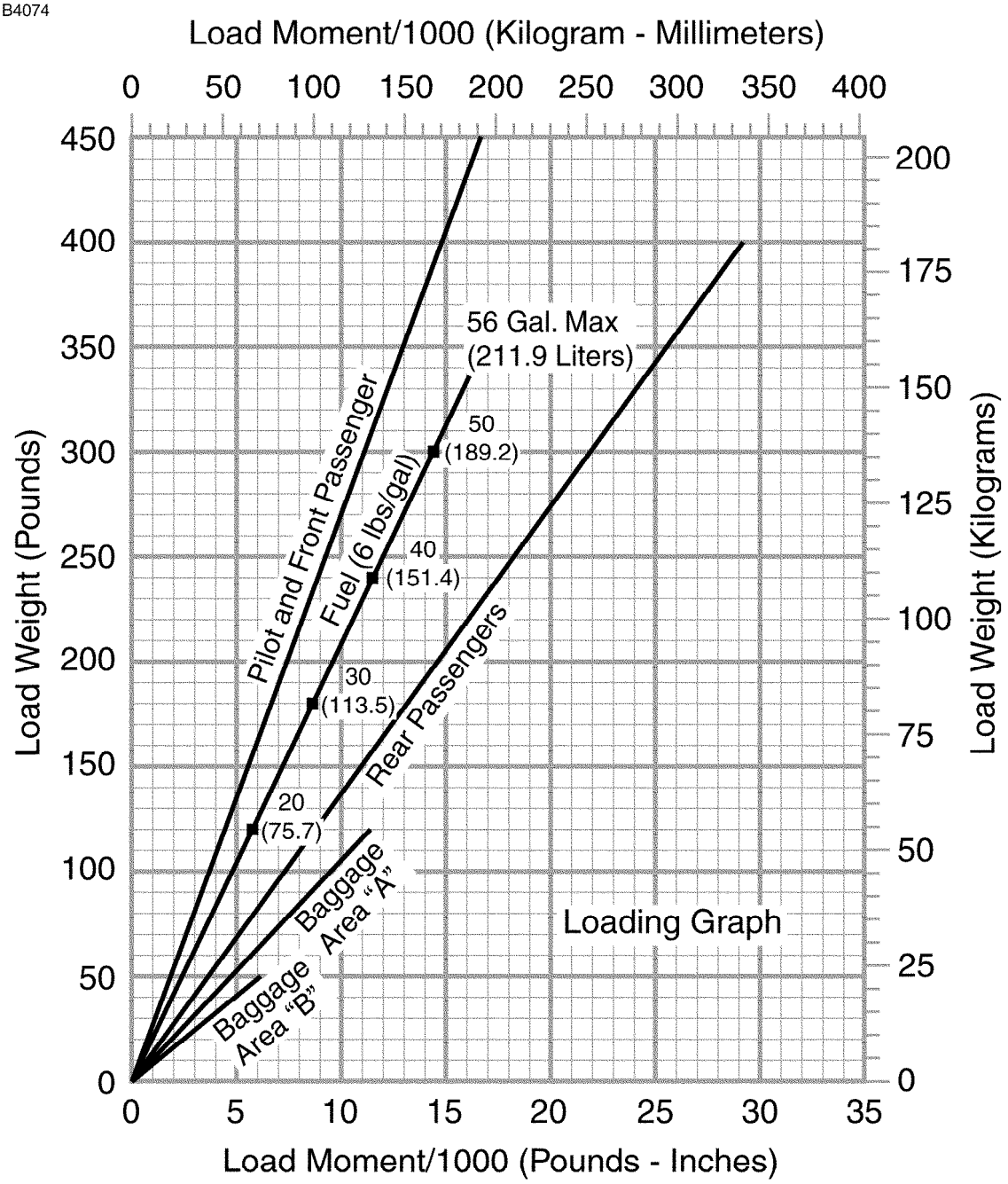

NOTE

Lines representing adjustable seats show the pilot or passenger center of gravity on adjustable seats positioned for an average occupant. Refer to the Loading Arrangements diagram for forward and aft limits of occupant C.G. range.

Figure 6-4

LOADING ARRANGEMENTS

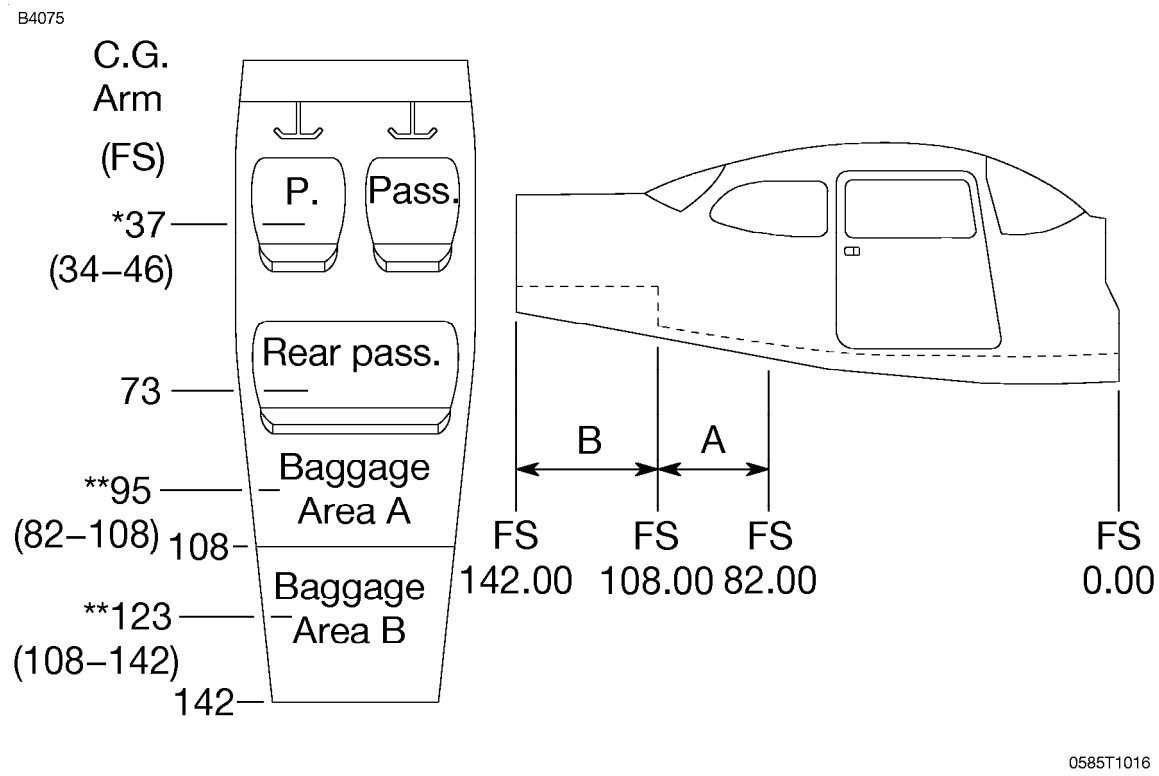

* Pilot or passenger center-of-gravity on adjustable seats positioned for average occupant. Numbers in parentheses indicate forward and aft limits of occupant center-of-gravity range.

** Arms measured to the center of the areas shown.

NOTE

- The usable fuel C.G. arm is located at FS 48.00.
- The aft baggage wall (approximate FS 108.00) or aft baggage wall (approximate FS 142.00) can be used as a convenient interior reference point for determining the location of baggage area fuselage stations.
- To achieve an airplane loading within the utility category, it may be necessary to remove the rear passenger seat assembly from the airplane. Refer to Figure 6-9 for applicable weight and arm.

Figure 6-5

INTERNAL CABIN DIMENSIONS

B4076

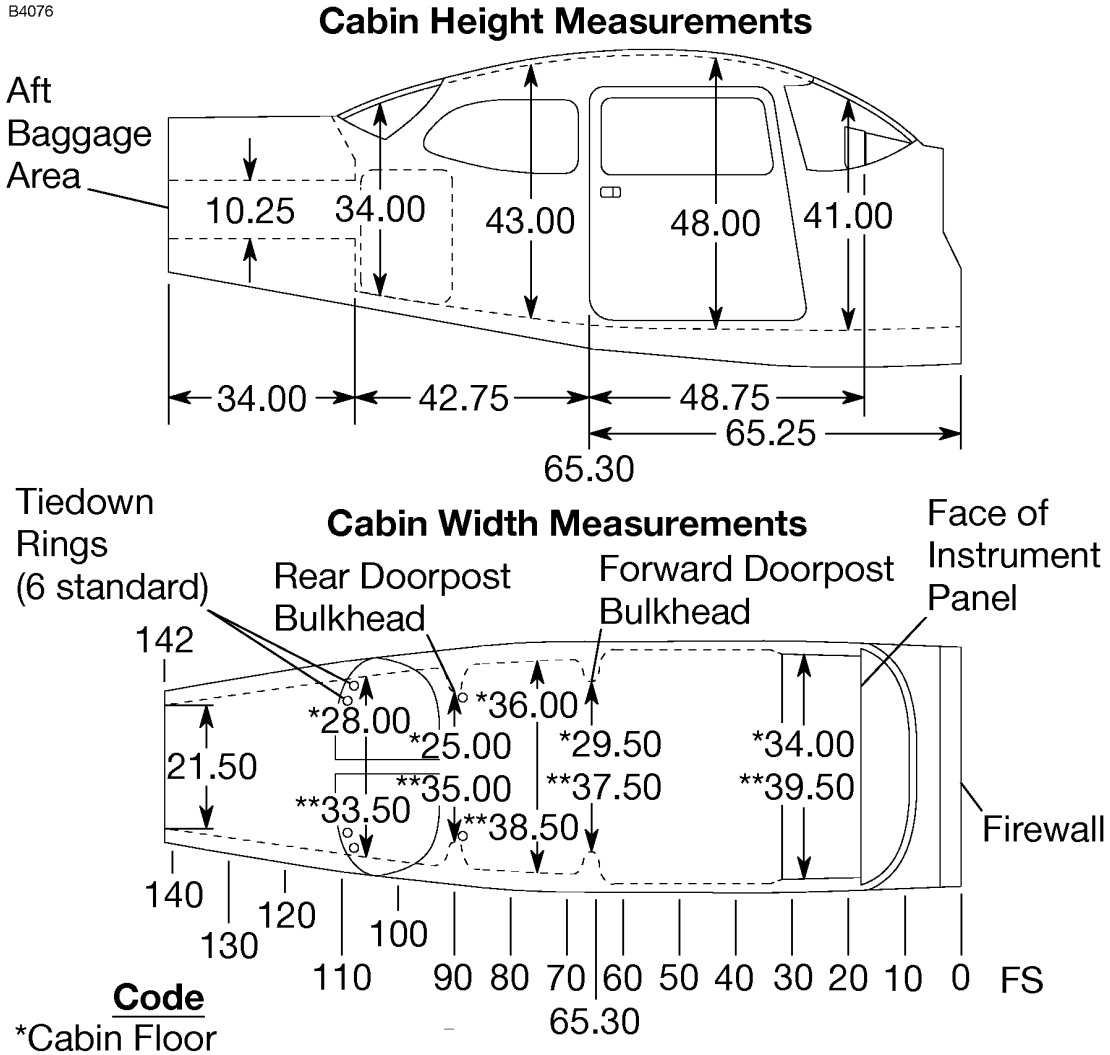

Door Opening Dimensions

	Width (Top)	Width (Bottom	Height (Front)	Height (Rear)
Cabin Door	32.00	37.00	40.50	39.00
Baggage Door	15.25	15.25	22.00	21.00

0585T1023
0585T1004

NOTE

- Maximum allowable floor loading: 200 pounds/square foot.
- All dimensions shown are in inches.

Figure 6-6

CENTER-OF-GRAVITY MOMENT ENVELOPE

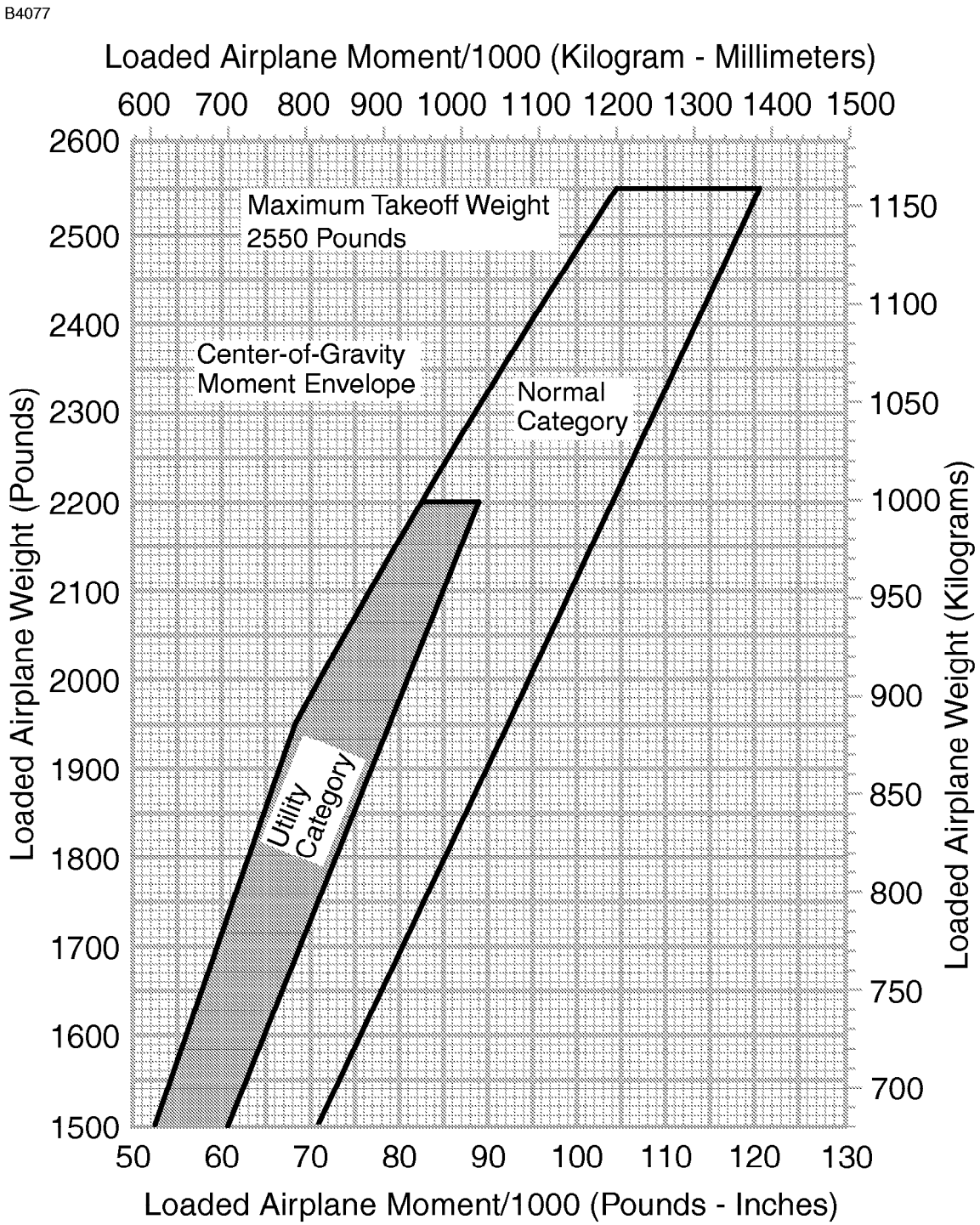

Figure 6-7

CENTER-OF-GRAVITY LIMITS

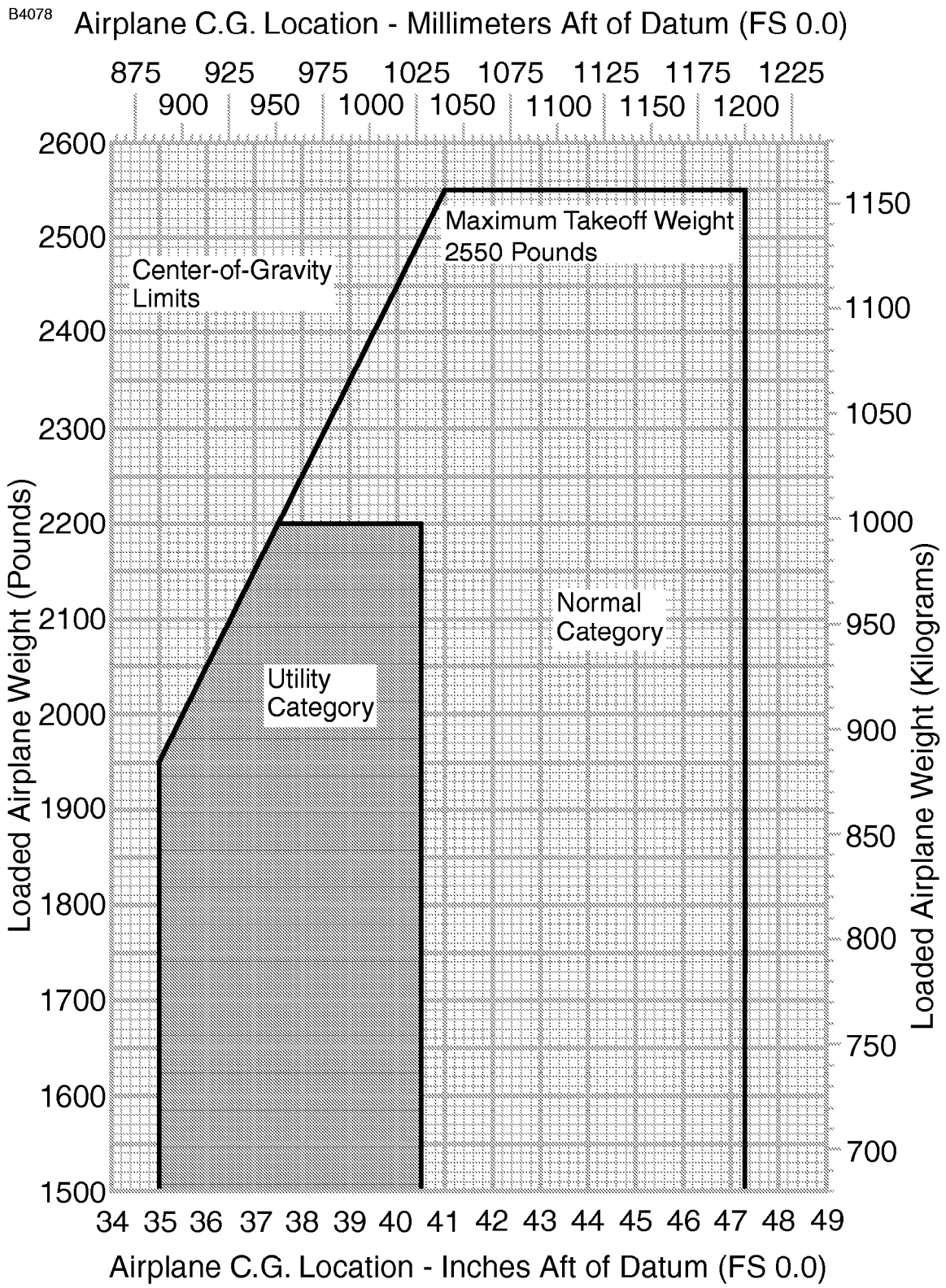

Figure 6-8

COMPREHENSIVE EQUIPMENT LIST

Figure 6-9 is a comprehensive list of all Cessna equipment which is available for the Model 172S airplane equipped with Garmin G1000 Integrated Cockpit System (Serials 172S9810 and On). This comprehensive equipment list provides the following information in column form:

In the **ITEM NO** column, each item is assigned a coded number. The first two digits of the code represent the identification of the item within Air Transport Association Specification 100 (11 for Paint and Placards; 24 for Electrical Power; 77 for Engine Indicating, etc.). These assignments also correspond to the Maintenance Manual chapter for the airplane. After the first two digits, items receive a unique sequence number (01, 02, 03, etc.). After the sequence number, a suffix letter is assigned to identify equipment as a required item, a standard item or an optional item.

Suffix letters are as follows:

R= Required items or equipment for FAA certification (14 CFR Part 23 or Part 91).
S= Standard equipment items.
O= Optional equipment items replacing required or standard items.
A= Optional equipment items which are in addition to required or standard items.

In the **EQUIPMENT LIST DESCRIPTION** column, each item is assigned a descriptive name to help identify its function.

In the **REF DRAWING** column, a Cessna drawing number is provided which corresponds to the item.

NOTE

If additional equipment is to be installed, it must be done in accordance with the reference drawing, service bulletin or a separate FAA approval.

In the **WT LBS** and **ARM INS** columns, information is provided on the weight (in pounds) and arm (in inches) of the equipment item.

NOTE

- Unless otherwise indicated, true values (not net change values) for the weight and arm are shown. Positive arms are distances aft of the airplane datum; negative arms are distances forward of the datum.

- Asterisks (*) in the weight and arm column indicate complete assembly installations. Some major components of the assembly are listed on the lines immediately following. The sum of these major components does not necessarily equal the complete assembly installation.

ITEM NO	EQUIPMENT LIST DESCRIPTION	REF DRAWING	WT LBS	ARM INS.
	11 - PLACARDS AND MARKINGS			
11-02-S	PAINT, OVERALL WHITE W/COLOR STRIPE	0500531	19.2*	95.4*
	- OVERALL WHITE COVER		18.4	91.5
	- COLOR STRIPING		0.8	135.9
	21 - AIR CONDITIONING			
21-01-S	VENTILATORS, ADJUSTABLE, CABIN AIR	0513575-2	1.7	60.0
21-02-S	CABIN HEATER SYSTEM, SHROUDED MUFFLER TYPE	0550365	2.5	-4.0
21-03-R	FORWARD AVIONICS COOLING FAN - MC24B3	3930379	0.5	12.7
21-04-R	AFT AVIONICS COOLING FAN	3940397	1.1	109.0
	22 - AUTO FLIGHT			
22-03-S	TWO AXIS AUTOPILOT			
	- KAP 140 TWO AXIS AUTOPILOT COMPUTER WITH ALTITUDE PRESELECT AND GPS ROLL STEERING	3930492	2.6	12.0
	- KS-270C PITCH SERVO	0501145-1	4.2	171.3
	- KS-272C PITCH TRIM SERVO	0501153-1	4.1	175.5
	- KS-271C ROLL SERVO	3940400-1	3.6	54.2
	23 - COMMUNICATIONS			
23-01-S	STATIC DISCHARGE WICKS (SET OF 10)	0501048-1	0.4	143.2
23-18-R	AUDIO/INTERCOM/MARKER BEACON			
	- GMA 1347 AUDIO PANEL	3930377	1.7	16.3
	- CI-102 MARKER BEACON ANTENNA	3960193-5	0.5	129.0
23-20-R	NAV/COM/GPS#1 COMPUTER	3921155		
	- GIA 63 INTEGRATED AVIONICS UNIT	3940397	4.9	113.3
	- CI 2480-200 VHF COMM/GPS ANTENNA	3960220-3	0.5	61.2
23-21-S	NAV/COM/GPS#2 COMPUTER	3921155		
	- GIA 63 INTEGRATED AVIONICS UNIT	3940397	4.9	113.3
	- CI 2480-400 VHF COMM/GPS/XM ANTENNA	3960220-4	0.5	61.2
	24 - ELECTRICAL POWER			
24-01-R	ALTERNATOR, 28 VOLT, 60 AMP -9910591-11	0550365	10.0	-29.0
24-02-R	BATTERY, 24 VOLT, 12.75 AMP HOUR	0518006	23.2	-5.0
24-03-R	POWER DISTRIBUTION MODULE S3100-344	0518006	6.4*	-2.5*
	- ALTERNATOR CONTROL	AC2101	0.2	-2.5
	- MASTER CONTACTOR	X61-0007	0.7	-2.5
	- STARTER CONTACTOR	X61-0012	0.7	-2.5
	- AMMETER TRANSDUCER	CS3100	0.1	-2.0
24-07-S	BATTERY, STANDBY - AVT 200413	0518025	14.0	11.2

Figure 6-9 (Sheet 1 of 8)

ITEM NO	EQUIPMENT LIST DESCRIPTION	REF DRAWING	WT LBS	ARM INS.
	25 - EQUIPMENT/FURNISHINGS			
25-01-R	SEAT, PILOT, ADJUSTABLE, CLOTH COVER	0719025-1	33.8	41.5
25-02-O	SEAT, PILOT, ADJUSTABLE, LEATHER/VINYL COVER	0719025-4	34.3	41.5
25-03-S	SEAT, FRONT PASSENGER, ADJUSTABLE, CLOTH COVER	0719025-1	33.8	41.5
25-04-O	SEAT, FRONT PASSENGER, ADJUSTABLE, LEATHER/VINYL COVER	0719025-4	34.3	41.5
25-05-S	SEAT, REAR PASSENGER, TWO PIECE BACK, CLOTH COVER	0719028-1	50.0	82.0
25-06-O	SEAT, REAR PASSENGER, TWO PIECE BACK, LEATHER/VINYL COVER	0719028-2	51.0	82.0
25-07-R	SEAT BELT AND SHOULDER HARNESS, INERTIA REEL, AUTO ADJUST, PILOT AND FRONT PASSENGER	0519031-1	5.2	50.3
25-08-O	SEAT BELT AND SHOULDER HARNESS, INERTIA REEL, MANUAL ADJUSTABLE, PILOT AND FRONT PASSENGER	0519031-200	4.0	50.3
25-09-S	SEAT BELT AND SHOULDER HARNESS, INERTIA REEL, AUTO ADJUST, REAR SEAT	0519031-1	5.2	87.8
25-10-O	SEAT BELT AND SHOULDER HARNESS, INERTIA REEL, MANUAL ADJUSTABLE, REAR SEAT	0519031-200	4.0	87.8
25-11-S	SUN VISOR (SET OF 2)	0514166-2	1.1	32.8
25-12-S	BAGGAGE RESTRAINT NET	2015009-7	0.5	95.0
25-13-S	CARGO TIEDOWN RINGS (SET OF 10)	0515055-6	0.2	95.0
25-15-R	PILOT'S OPERATING HANDBOOK AND FAA APPROVED AIRPLANE FLIGHT MANUAL (STOWED IN FRONT PASSENGER'S SEAT BACK)	0500832-1	2.2	50.0
25-16-S	FUEL SAMPLING CUP (STOWED IN PILOT'S SEAT BACK)	S2107-1	0.1	50.0
25-17-S	TOW BAR, NOSE GEAR (STOWED)	0501019-1	1.7	124.0
25-18-R	EMERGENCY LOCATOR TRANSMITTER	3940401-1		
	- ELT TRANSMITTER	3940440	1.8	113.3
	- ANTENNA AND CABLE ASSEMBLY	3940440	0.1	122.0
25-39-R	GARMIN G1000 COCKPIT REFERENCE GUIDE (STOWED IN COCKPIT SIDE PANEL POCKET)		1.5	15.0
25-40-S	APPROACH PLATE HOLDER	0715083-1	0.1	22.0

Figure 6-9 (Sheet 2)

ITEM NO	EQUIPMENT LIST DESCRIPTION	REF DRAWING	WT LBS	ARM INS.
	26 - FIRE PROTECTION			
26-01-S	FIRE EXTINGUISHER	0501011-2		
	- FIRE EXTINGUISHER, HAND TYPE	A352GS	4.8	44.0
	- MOUNTING CLAMP AND HARDWARE	1290010-1	0.5	42.2
	27 - FLIGHT CONTROLS			
27-01-S	DUAL CONTROLS, RIGHT SEAT	0506008-1	5.5*	12.4*
	- CONTROL WHEEL, COPILOT	0513576-4	2.6	26.0
	- RUDDER AND BRAKE PEDAL, COPILOT	0510402-16	1.1	6.8
27-02-A	RUDDER PEDAL EXTENSION (SET OF 2) (INSTALLED ARM SHOWN)	0501082-1	2.9	8.0
	28 - FUEL			
28-01-R	AUXILIARY FUEL PUMP - 5100-00-4	0516015	1.9	9.5
28-03-R	FUEL SENDER - S3852-2	0522644	0.1	47.4
	30 - ICE AND RAIN PROTECTION			
30-01-S	PITOT HEAT	0523080	0.1	28.0
	31 - INDICATING/RECORDING SYSTEM			
31-02-S	RECORDING HOURMETER - C664503-0103	0506009	0.5	16.1
31-04-R	PNEUMATIC STALL WARNING SYSTEM	0523112	0.4	28.5
31-05-R	GEA 71 ENGINE/AIRFRAME UNIT	3930377	2.2	11.4
31-06-R	GTP 59 OUTSIDE AIR TEMPERATURE (OAT) PROBE	0518006	0.1	41.5
	32 - LANDING GEAR			
32-01-R	WHEEL BRAKE AND TIRE, 6.00 X 6 MAIN (2)	0541200-7,-8	34.4*	57.8*
	- WHEEL ASSEMBLY, (EACH)	C163001-0104	6.2	58.2
	- BRAKE ASSEMBLY, (EACH)	C163030-0111	1.8	54.5
	- TIRE, 6-PLY, 6.00 X 6, BLACKWALL	C262003-0101	7.9	58.2
	- TUBE, (EACH)	C262023-0102	1.3	58.2
32-02-R	WHEEL AND TIRE, 5.00 X 5 NOSE	0543062-17	9.5*	-6.8*
	- WHEEL ASSEMBLY	1241156-12	3.5	-6.8
	- TIRE, 6-PLY, 5.00 X 5, BLACKWALL	C262003-0202	4.6	-6.8
	- TUBE	C262023-0101	1.4	-6.8
32-03-A	WHEEL FAIRINGS AND INSTALLATION	0541225-1	16.5*	48.1*
	- WHEEL FAIRING, NOSE	0543079-3	3.5	-3.5
	- WHEEL FAIRINGS, MAIN (SET OF 2)	0541223-1, -2	10.1	61.1
	- BRAKE FAIRINGS (SET OF 2)	0541224-1, -2	1.1	55.6
	- MOUNTING PLATE (SET OF 2)	0541220-1,-2	0.8	59.5
32-04-O	HUB CAPS, WHEELS	0741048-8	0.1	62.1

Figure 6-9 (Sheet 3)

ITEM NO	EQUIPMENT LIST DESCRIPTION	REF DRAWING	WT LBS	ARM INS.
	33 - LIGHTS			
33-01-S	MAP LIGHT IN CONTROL WHEEL	0706015	0.2	21.5
33-02-S	COURTESY LIGHTS UNDER WING	0521101-8	0.5	61.0
33-04-S	FLASHING BEACON	0506003-6	1.4	204.7
33-05-R	ANTICOLLISION STROBE LIGHT	0723628	3.4	43.3
33-06-S	LANDING AND TAXI LIGHT	0523029-7	2.4	28.7
	34 - NAVIGATION			
34-01-R	INDICATOR, AIRSPEED - S3325-1	0506009	0.6	16.2
34-02-S	ALTERNATE STATIC AIR SOURCE	0501017-1	0.2	15.5
34-03-R	ALTIMETER, SENSITIVE WITH 20 FOOT MARKINGS, INCHES OF MERCURY AND MILLIBARS - S3328-1	0506009	0.9	14.0
34-06-R	COMPASS, MAGNETIC	0513262-3	0.5	18.0
34-17-R	TRANSPONDER	3940397		
	- GTX-33 TRANSPONDER	3910317-5	3.0	134.0
	- CI 105-16 TRANSPONDER ANTENNA	3960191	0.4	86.3
34-18-R	PFD DISPLAY	3930377		
	- GDU-1040 DISPLAY	3910317-1	6.3	16.4
34-19-R	MFD DISPLAY	3930377		
	- GDU-1040 DISPLAY	3910317-1	6.3	16.4
34-20-R	ATTITUDE HEADING REFERENCE SENSOR (AHRS)	3940397		
	- GRS 77 AHRS	3910317-3	2.4	134.0
	- GMU 44 MAGNETOMETER	3940398	0.4	52.7
34-21-R	AIR DATA COMPUTER	3940397		
	- GDC 74A AIR DATA COMPUTER	3910317-6	1.7	11.4
34-23-S	BLIND YAW RATE SENSOR (TURN COORDINATOR)	3930493	1.0	15.5
34-24-O	WX 500 STORMSCOPE			
	- PROCESSOR - S3100-276	3940403	2.5	162.0
	- ANTENNA - 805-10930-001	3960206	1.0	175.4
34-25-S	GDL-69A DATALINK	3940397	1.9	112.8
34-26-O	AUTOMATIC DIRECTION FINDER (ADF)			
	- KR 87 ADF RECEIVER	3930494	3.2	12.1
	- ADF ANTENNA	3960187	4.2	39.3
34-27-O	DISTANCE MEASURING EQUIPMENT (DME)			
	- KN 63 REMOTE DME	3940448	2.8	154.0
	- CI 105-16 DME ANTENNA	3960231	0.4	114.5
34-28-O	KTA 810 TRAFFIC ADVISORY SYSTEM	3940441	8.8	165.0

Figure 6-9 (Sheet 4)

ITEM NO	EQUIPMENT LIST DESCRIPTION	REF DRAWING	WT LBS	ARM INS.
	37 - VACUUM			
37-01-R	ENGINE DRIVEN VACUUM PUMP			
	- VACUUM PUMP - AA3215CC	0501135	2.1	-5.0
	- COOLING SHROUD	1201998-1	0.2	-5.6
	- FILTER	1201075-2	0.3	2.0
	- VACUUM REGULATOR	AA2H3-2	0.5	2.0
37-04-R	VACUUM TRANSDUCER - P165-5786	0501135	0.3	10.3
	53 - FUSELAGE			
53-01-S	REFUELING STEPS AND HANDLE	0513415-2	1.7	16.3
	56 - WINDOWS			
56-01-S	WINDOW, HINGED RIGHT SIDE (NET CHANGE)	0517001-40	2.3*	48.0*
56-02-S	WINDOW, HINGED LEFT DOOR (NET CHANGE)	0517001-39	2.3*	48.0*
	61 - PROPELLER			
61-01-R	FIXED PITCH PROPELLER	0550320-18	38.8*	-38.2*
	- MCCAULEY 76 INCH PROPELLER	IA170E/JHA7660	35.0	-38.4
	- MCCAULEY 3.5 INCH PROPELLER SPACER	C5464	3.6	-36.0
61-02-R	SPINNER, PROPELLER	0550320-11	1.8*	-41.0*
	- SPINNER DOME ASSEMBLY	0550236-14	1.0	-42.6
	- FWD SPINNER BULKHEAD	0552231-1	0.3	-40.8
	- AFT SPINNER BULKHEAD	0550321-10	0.4	-37.3
	71 - POWERPLANT			
71-01-R	FILTER, INDUCTION AIR	0550365	0.3	-27.5
71-02-O	WINTERIZATION KIT (STOWED) (INSTALLED ARM SHOWN)	0501128-3	0.8*	-20.3*
	- BREATHER TUBE INSULATION	0552011	0.4	-13.8
	- COWL INLET COVERS (INSTALLED)	0552229-3,-4	0.3	-32.0
	- COWL INLET COVERS (STOWED)	0552229-3,-4	0.3	95.0

Figure 6-9 (Sheet 5)

ITEM NO	EQUIPMENT LIST DESCRIPTION	REF DRAWING	WT LBS	ARM INS.
	72 - ENGINES			
72-03-R	ENGINE, LYCOMING IO-360-L2A	0550365	297.8*	-18.6*
	73 - ENGINE FUEL AND CONTROL			
73-04-S	FUEL FLOW TRANSDUCER - 680501K	0501168	0.8	-22.6
	77 - ENGINE INDICATING			
77-03-R	ENGINE TACHOMETER SENSOR - 1A3C-1	0501168	0.2	-8.0
77-04-S	CYLINDER HEAD THERMOCOUPLES (ALL CYLINDERS) - 32DKWUE006F0126	0501168	0.2	-12.0
77-05-S	EXHAUST THERMOCOUPLES (ALL CYLINDERS) - 86317	0501168	0.3	-12.0
	78 - EXHAUST			
78-01-R	EXHAUST SYSTEM	9954100-1	16.3*	-20.0*
	- MUFFLER AND TAILPIPE WELD ASSEMBLY	9954000-2	4.6	-22.7
	- SHROUD ASSEMBLY, MUFFLER HEATER	9954100-3	0.8	-22.7
	79 - OIL			
79-01-R	OIL COOLER - 10877A	0550365	2.3	-11.0
79-02-R	OIL PRESSURE SENSOR - P165-5281	0550365	0.2	-12.9
79-03-R	OIL TEMPERATURE SENSOR - S2335-1	0550365	0.2	-8.5

Figure 6-9 (Sheet 6)

AIRPLANE AND SYSTEMS DESCRIPTION

TABLE OF CONTENTS

	Page
Introduction	7-5
Airframe	7-5
Flight Controls	7-6
Trim Systems	7-6
Instrument Panel	7-9
Pilot Panel Layout	7-9
Center Panel Layout	7-10
Right Panel Layout	7-12
Center Pedestal Layout	7-12
Flight Instruments	7-15
Attitude Indicator	7-16
Airspeed Indicator	7-17
Altimeter	7-17
Horizontal Situation Indicator	7-18
Vertical Speed Indicator	7-19
Ground Control	7-20
Wing Flap System	7-21
Landing Gear System	7-22
Baggage Compartment	7-22
Seats	7-22
Integrated Seat Belt/Shoulder Harness	7-23
Entrance Doors And Cabin Windows	7-26
Control Locks	7-27

(Continued Next Page)

TABLE OF CONTENTS (Continued)

Page

Engine 7-28
Engine Controls 7-28
Engine Instruments 7-29
New Engine Break In And Operation 7-33
Engine Lubrication System 7-34
Ignition And Starter System 7-34
Air Induction System 7-35
Exhaust System 7-35
Fuel Injection System 7-36
Cooling System 7-36
Propeller 7-36
Fuel System 7-36
Fuel Distribution 7-37
Fuel Indicating System 7-38
Auxiliary Fuel Pump Operation 7-39
Fuel Return System 7-41
Fuel Venting 7-41
Reduced Tank Capacity 7-41
Fuel Selector Valve 7-42
Fuel Drain Valves 7-42
Brake System 7-43
Electrical System 7-43
G1000 Annunciator Panel 7-48
Master Switch 7-48
Standby Battery Switch 7-49
Avionics Switch 7-49
Electrical System Monitoring And Annunciations 7-50
Voltmeter 7-50
Ammeter 7-50
Low Voltage Annunciation 7-51
Circuit Breakers And Fuses 7-52
External Power Receptacle 7-52

(Continued Next Page)

TABLE OF CONTENTS (Continued)

Page

Lighting Systems 7-54
Exterior Lighting 7-54
Interior Lighting 7-55
Cabin Heating, Ventilating And Defrosting System 7-57
Pitot-Static System And Instruments 7-59
Vacuum System And Instruments 7-60
Attitude Indicator 7-60
Vacuum Indicator 7-60
Low Vacuum Annunciation 7-60
Clock/O.A.T. Indicator 7-62
Stall Warning System 7-62
Standard Avionics 7-62
GDU 1040 Color Display 7-62
GMA 1347 Audio Panel 7-63
GIA 63 Integrated Avionics Unit 7-63
GRS 77 Attitude Heading Reference System (AHRS) and GMU 44 Magnetometer 7-64
GDC 74A Air Data Computer 7-64
GEA 71 Engine Monitor 7-64
GTX 33 Transponder 7-64
GDL 69A XM Weather and Radio Data Link 7-65
Bendix/King KAP 140 2 Axis Autopilot (if installed) 7-65
Avionics Support Equipment 7-66
Avionics Cooling Fans 7-66
Antennas 7-67
Microphone And Headset Installations 7-67
Auxiliary Audio Input Jack 7-68
12V Power Outlet 7-70
Static Dischargers 7-70
Cabin Features 7-71
Emergency Locator Transmitter (ELT) 7-71
Cabin Fire Extinguisher 7-71
Carbon Monoxide Detection System (if installed) 7-72

INTRODUCTION

This section provides description and operation of the airplane and its systems. Some equipment described herein is optional and may not be installed in the airplane. Refer to the Supplements, Section 9, for details of other optional systems and equipment.

AIRFRAME

The airplane is an all metal, four-place, high wing, single engine airplane equipped with tricycle landing gear and is designed for general utility and training purposes.

The construction of the fuselage is a conventional formed sheet metal bulkhead, stringer, and skin design referred to as semimonocoque. Major items of structure are the front and rear carry through spars to which the wings are attached, a bulkhead and forgings for main landing gear attachment at the base of the rear door posts, and a bulkhead with attach fittings at the base of the forward door posts for the lower attachment of the wing struts. Four engine mount stringers are also attached to the forward door posts and extend forward to the firewall.

The externally braced wings, containing integral fuel tanks, are constructed of a front and rear spar with formed sheet metal ribs, doublers, and stringers. The entire structure is covered with aluminum skin. The front spars are equipped with wing-to-fuselage and wing-to-strut attach fittings. The aft spars are equipped with wing-to-fuselage attach fittings, and are partial span spars. Conventional hinged ailerons and single slot type flaps are attached to the trailing edge of the wings. The ailerons are constructed of a forward spar containing balance weights, formed sheet metal ribs and "V" type corrugated aluminum skin joined together at the trailing edge. The flaps are constructed basically the same as the ailerons, with the exception of the balance weights and the addition of a formed sheet metal leading edge section.

(Continued Next Page)

AIRFRAME (Continued)

The empennage (tail assembly) consists of a conventional vertical stabilizer, rudder, horizontal stabilizer, and elevator. The vertical stabilizer consists of a spar, formed sheet metal ribs and reinforcements, a wraparound skin panel, formed leading edge skin and a dorsal. The rudder is constructed of a formed leading edge skin and spar with attached hinge brackets and ribs, a center spar, a wrap around skin, and a ground adjustable trim tab at the base of the trailing edge. The top of the rudder incorporates a leading edge extension which contains a balance weight.

The horizontal stabilizer is constructed of a forward and aft spar, ribs and stiffeners, center, left, and right wrap around skin panels, and formed leading edge skins. The horizontal stabilizer also contains the elevator trim tab actuator.

Construction of the elevator consists of formed leading edge skins, a forward spar, aft channel, ribs, torque tube and bellcrank, left upper and lower "V" type corrugated skins, and right upper and lower "V" type corrugated skins incorporating a trailing edge cutout for the trim tab. The elevator tip leading edge extensions incorporate balance weights. The elevator trim tab consists of a spar, rib, and upper and lower "V" type corrugated skins.

FLIGHT CONTROLS

The airplane's flight control system (Refer to Figure 7-1) consists of conventional aileron, rudder, and elevator control surfaces. The control surfaces are manually operated through cables and mechanical linkage using a control wheel for the ailerons and elevator, and rudder/brake pedals for the rudder.

TRIM SYSTEM

A manually operated elevator trim system is provided (Refer to Figure 7-1). Elevator trimming is accomplished through the elevator trim tab by utilizing the vertically mounted trim control wheel in the cockpit. Forward rotation of the trim wheel will trim nose down; conversely, aft rotation will trim nose up.

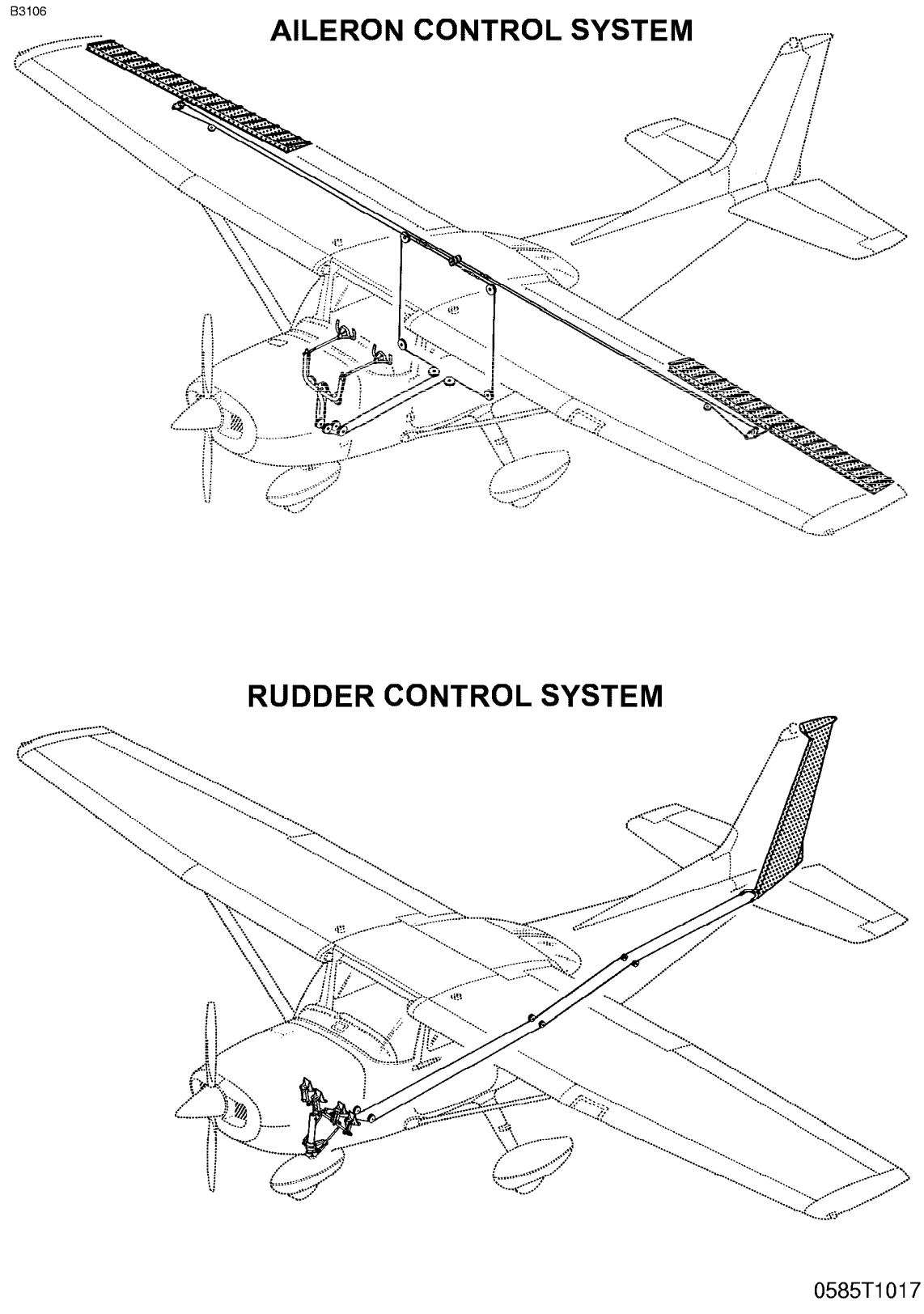

Figure 7-1. Flight Control and Trim Systems (Sheet 1 of 2)

33107

ELEVATOR CONTROL SYSTEM

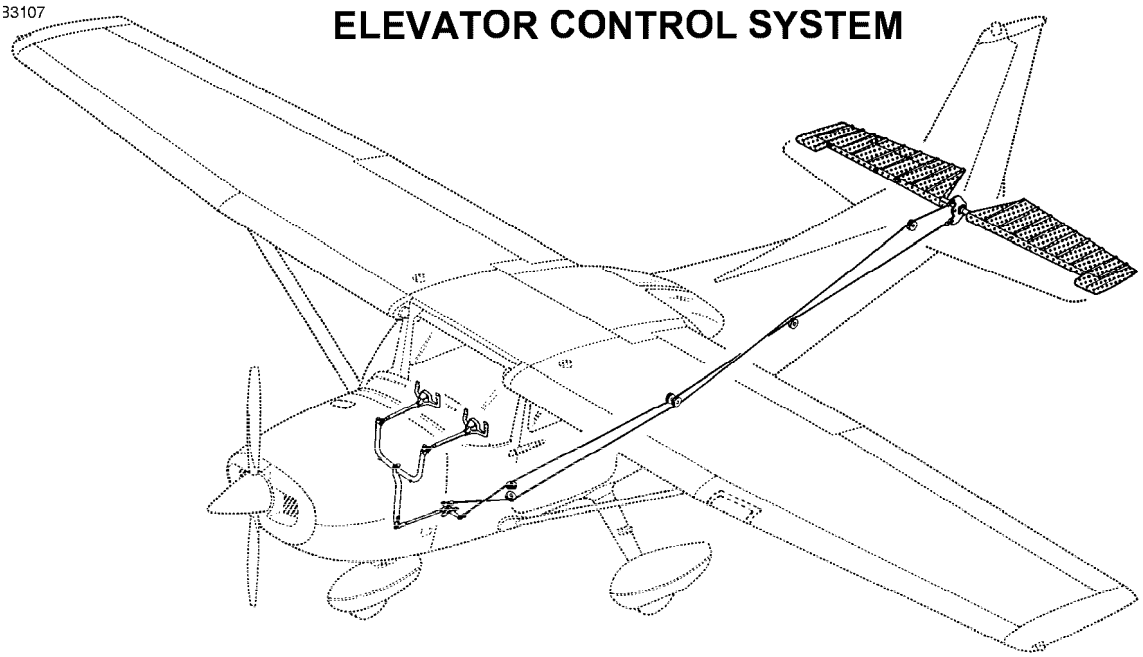

ELEVATOR TRIM CONTROL SYSTEM

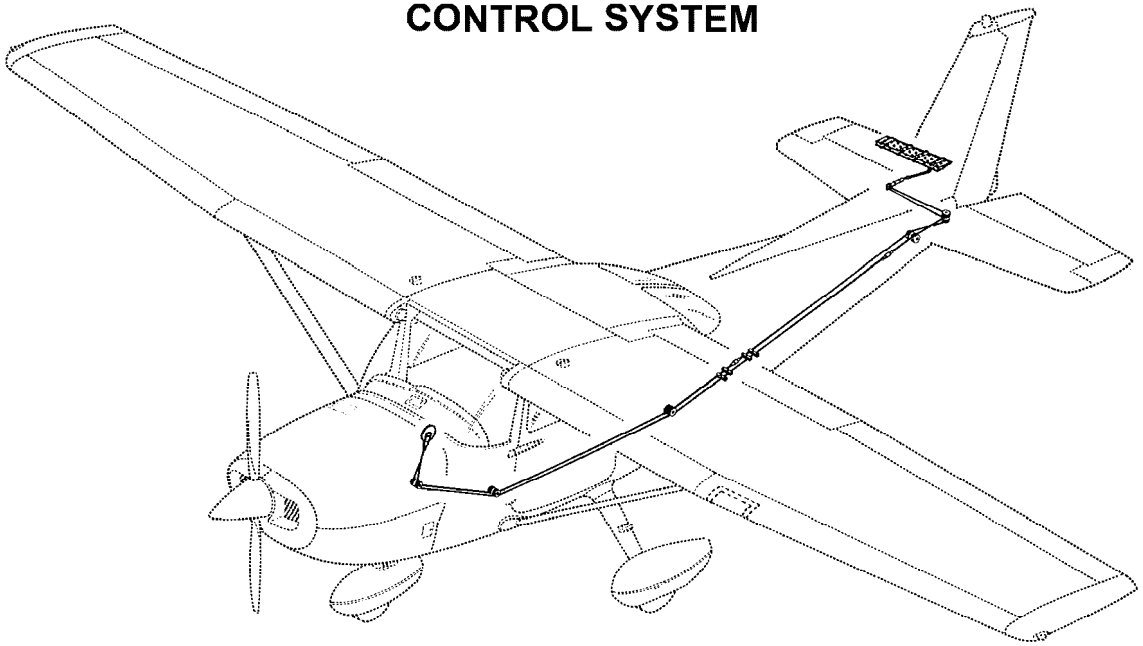

0585T1018

Figure 7-1. Flight Control and Trim Systems (Sheet 2)

INSTRUMENT PANEL

The instrument panel (refer to Figure 7-2) is of all metal construction and is installed in sections so equipment can be easily removed for maintenance. The glareshield, above and projecting aft from the instrument panel, limits undesirable reflections on the windshield from lighted equipment and displays mounted in the instrument panel.

The Nav III instrument panel contains the Garmin GDU 1040 Primary Flight (PFD) and Multifunction (MFD) Displays and the Garmin GMA 1347 Audio Panel. For specific details regarding the instruments, switches, circuit breakers and controls on the instrument panel, refer to the related topics in this section.

PILOT SIDE PANEL LAYOUT

The GDU 1040 Primary Flight Display (PFD), centered on the instrument panel in front of the pilot, shows the primary flight instruments during normal operation. During engine start, reversionary operation (MFD failure) or when the DISPLAY BACKUP switch is selected, the Engine Indication System (EIS) is shown on the PFD. Refer to the Garmin G1000™ Cockpit Reference Guide for specific operating information.

The Standby Battery (STBY BAT) switch is found at the upper left corner of the pilot instrument panel on an internally lighted sub-panel. The switch positions (ARM/OFF/TEST) select the standby battery operating modes. The rocker-type MASTER and AVIONICS switches are found immediately below the standby battery switch.

The controls for adjusting instrument panel, equipment, and pedestal lighting are found together on the sub-panel below the MASTER and AVIONICS switches. See the INTERNAL LIGHTING paragraphs of this section for more information.

(Continued Next Page)

INSTRUMENT PANEL (Continued)

PILOT SIDE PANEL LAYOUT (Continued)

Switches for the airplane electrical systems and equipment are found on an internally lighted sub-panel found below the lower left corner of the PFD. Each switch is labeled for function and is ON when the handle is in the up position. See the ELECTRICAL EQUIPMENT descriptions in this section for further information.

The circuit breaker panel is found along the lower edge of the pilot's instrument panel below the electrical equipment switch panel and pilot control wheel column. Each circuit breaker is identified for the equipment or function it controls and for the bus from which it receives power. Lighting for this sub-panel is controlled using the SW/CB PANELS dimmer control. See the ELECTRICAL EQUIPMENT descriptions in this section for further information.

CENTER PANEL LAYOUT

The Garmin GMA 1347 Audio Panel is found on the upper half of the center instrument panel (immediately to the right of the PFD). A pushbutton switch labeled "DISPLAY BACKUP" to manually select display reversion mode is found on the lower face of the GMA 1347. Refer to the GMA 1347 Pilot's Guide for operating information.

The GDU 1040 Multifunction Display (MFD) is found on the upper center panel to the right of the GMA 1347. The MFD depicts Engine Indication System information along the left side of the display and shows navigation, terrain, lightning and traffic data on the moving map. Flight management or display configuration information can be shown on the MFD in place of the moving map pages. Refer to the Garmin G1000™ GPS/MFD Pilot's Guide for operating information.

(Continued Next Page)

INSTRUMENT PANEL (Continued)

CENTER PANEL LAYOUT (Continued)

The standby instrument cluster is in the center instrument panel below the GMA 1347 Audio Panel. A conventional (mechanical) airspeed indicator and a sensitive aneroid altimeter are on each side of the vacuum-powered attitude indicator. The pitot-static instruments share the airplane pitot head and static ports with the GDC 74A Air Data Computer. The attitude indicator features a low vacuum "flag" to provide immediate warning of vacuum system failure.

The Bendix/King KAP 140 2 Axis Autopilot with Altitude Preselect is found on the center panel below the standby instruments. A DC electric powered turn coordinator, installed forward of the instrument panel and not visible to the pilot, provides a roll rate signal to the KAP 140. The KAP 140 receives NAV, HDG, and analog roll steering inputs from the G1000 system. KAP 140 ROL, VS, and ALT modes operate independently from the G1000. Refer to Section 9, Supplement 3 for operation of the Bendix/King KAP 140 2 Axis Autopilot.

The engine controls are found on the lower center instrument panel below the KAP 140 Autopilot (if installed). The controls are conventional push-pull-type controls for throttle and mixture. See ENGINE description in this section for operating information.

The Alternate Static Air valve is found adjacent to the throttle control. Refer to the PITOT-STATIC SYSTEM AND INSTRUMENTS description in this section for operating information.

The wing flap control and indicator is found at the lower right side of the center panel. Refer to the WING FLAP SYSTEM description in this section for operating information.

(Continued Next Page)

INSTRUMENT PANEL (Continued)

RIGHT PANEL LAYOUT

The Emergency Locator Transmitter (ELT) mode switch (ON/AUTO/RESET) is positioned at the upper inboard corner of the right panel adjacent to the MFD. Refer to the EMERGENCY LOCATOR TRANSMITTER description in this section for operating information.

The Hour (Hobbs) meter is found to the right of the ELT switch and records engine operating time (when oil pressure is greater than 20 PSI) for maintenance purposes. Refer to the ENGINE INSTRUMENTS description in this section for further information.

CENTER PEDESTAL LAYOUT

The center pedestal, located below the center panel, contains the elevator trim control wheel, trim position indicator, 12V power outlet, aux audio input jack and a bracket for the microphone. The fuel selector valve handle is located at the base of the pedestal.

INSTRUMENT PANEL

B3975

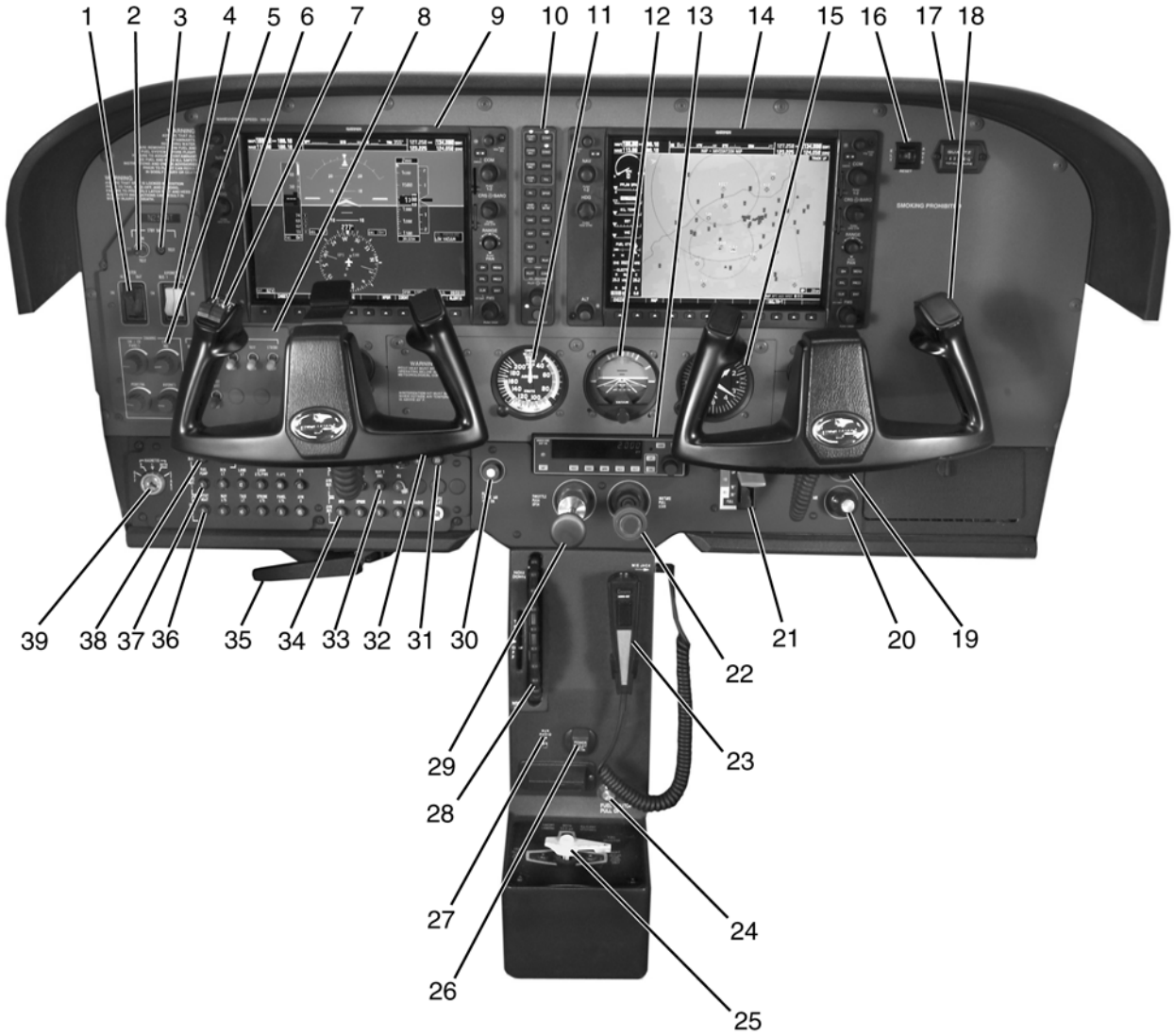

0518P1119

Figure 7-2. Instrument Panel (Sheet 1 of 2)

INSTRUMENT PANEL

1. MASTER Switch (ALT and BAT)
2. STBY BATT Switch
3. STBY BATT Test Annunciator
4. AVIONICS Switch (BUS 1 and BUS 2)
5. DIMMING Panel
6. Autopilot/Electric Elevator Trim Disengage Switches
7. Microphone Switch
8. Electrical Switches
9. GDU 1040 Primary Flight Display
10. GMA 1437 Audio Panel
11. Standby Airspeed Indicator
12. Standby Attitude Indicator
13. KAP 140 Autopilot
14. GDU 1040 Multi-Function Display
15. Standby Altimeter
16. ELT Remote Switch/Annunciator
17. Flight Hour Recorder
18. Microphone Switch
19. Cabin Heat Control
20. Cabin Air Control
21. Wing Flap Switch Lever And Position Indicator
22. Mixture Control
23. Hand Held Microphone
24. Fuel Shutoff Valve Control
25. Fuel Selector Valve
26. 12V/10A Power Outlet
27. Aux Audio Input Jack
28. Elevator Trim Control Wheel And Position Indicator
29. Throttle (With Friction Lock)
30. ALT Static Air Valve Control
31. Essential System (ESS) Bus Circuit Breaker Panel
32. Yoke Mounted Chart Light Dimmer
33. Avionics (AVN) BUS 1 Circuit Breaker Panel
34. Avionics (AVN) BUS 2 Circuit Breaker Panel
35. Parking Brake Handle
36. Electrical BUS 2
37. Electrical BUS 1
38. Crossfeed (X-Feed) BUS Circuit Breaker Panel
39. MAGNETOS Switch

Figure 7-2. Instrument Panel (Sheet 2)

FLIGHT INSTRUMENTS

The G1000 Integrated Cockpit System primary flight instrument indications are shown on the GDU 1040 Primary Flight Display (PFD). The primary flight instruments are arranged on the PFD in the basic "T" configuration. The attitude indicator (AI) and horizontal situation indicator (HSI) are centered vertically on the PFD and are conventional in appearance and operation. Vertical tape-style (scrolling scale) indicators with fixed pointers and digital displays show airspeed, altitude, and vertical speed. The vertical indicators take the place of analog indicators with a fixed circular scale and rotating pointer.

Knobs, knob sets (two knobs on a common shaft) and membrane type push button switches, found on the bezel surrounding each GDU 1040 display, control COM, NAV, XPDR, and GPS avionics, set BARO (barometric pressure), CRS (course), and HDG (heading), and work various flight management functions. Some push button switches are dedicated to certain functions (keys) while other switches have functions defined by software (softkeys). A softkey may perform various operations or functions at various times based on software definition. Softkeys are found along the lower bezel of the GDU 1040 displays.

(Continued Next Page)

FLIGHT INSTRUMENTS (Continued)

ATTITUDE INDICATOR

The G1000 attitude indicator is shown on the upper center of the PFD. The attitude indication data is provided by the GRS 77 Attitude and Heading Reference (AHRS) unit. The G1000 attitude indicator provides a horizon line that is the full width of the GDU 1040 display.

The roll index scale is conventional with 10° graduations to 30° and then 15° graduations to 60° of roll. The roll pointer is slaved to the airplane symbol. The pitch index scale is graduated in 5° increments with every 10° of pitch labeled. If pitch limits are exceeded in either the nose-up or nose-down direction, red warning chevrons will appear on the indicator to point the way back to level flight. A small white trapezoid located below the roll pointer moves laterally left and right to provide the slip-skid information previously supplied by the skid indicator ball. The trapezoid should be centered below the roll pointer for coordinated turns. The standby (vacuum) attitude indicator is found on the lower center instrument panel.

(Continued Next Page)

FLIGHT INSTRUMENTS (Continued)

AIRSPEED INDICATOR

The G1000 vertical tape airspeed indicator is shown along the upper left side of the PFD. The airspeed indication data is provided by the GDC 74A Air Data Computer unit. Colored arcs are provided to indicate the maximum speed, high cruise speed caution range, normal operating range, full wing flap operating range and low airspeed awareness band. Calculated true airspeed is displayed in a window at the bottom edge of the airspeed tape.

The standby (pneumatic) airspeed indicator is found on the lower center instrument panel.

ALTIMETER

The primary altitude indicator (altimeter) is found along the right side of the attitude indicator on the GDU 1040 Primary Flight Display. The altitude indication data is provided by the GDC 74A Air Data Computer unit. The local barometric pressure is set using the BARO knob on the GDU 1040 displays. The GDU 1040 BARO setting has no effect on the KAP 140 Autopilot BARO setting.

A cyan selectable altitude reference pointer ("bug") is displayed on the altimeter tape and is set using the ALT SEL knob on the GDU 1040 displays. The altitude bug set-point is shown in a window at the top edge of the altimeter. The ALT SEL knob has no effect on the KAP 140 Autopilot altitude preselect or altitude hold functions.

NOTE

The KAP 140 Autopilot Altitude Preselect, Altitude Hold and BARO settings are completely independent of the G1000 ALT SEL and BARO settings.

The standby (aneroid) sensitive altimeter is found on the center instrument panel.

(Continued Next Page)

FLIGHT INSTRUMENTS (Continued)

HORIZONTAL SITUATION INDICATOR

The horizontal situation indicator (HSI) is found along the lower center of the GDU 1040 Primary Flight Display. The heading indication data is provided by the GRS 77 Attitude and Heading Reference (AHRS) and GMU 44 Magnetometer units. The HSI combines a stabilized magnetic direction indicator (compass card) with selectable navigation deviation indicators for GPS or VHF navigation. The HSI is conventional in appearance and operation.

Magnetic heading is shown numerically in a window centered above the heading index (lubber line) at the top of the HSI. Reference index marks are provided at 45° intervals around the compass card. A circular segment scale below the heading window at the top of the HSI shows half and standard rates of turn based on the length of the magenta turn vector.

The cyan HSI heading reference pointer ("bug") is set using the HDG knob on the GDU 1040 display. The selected heading is shown digitally in a window above the upper LH 45° index mark. The heading window will disappear approximately 3 seconds after the HDG knob stops turning. The selected heading will provide the control input to the Bendix/King KAP 140 when the Autopilot is engaged in HDG mode.

The CDI navigation source shown on the HSI is set using the CDI softkey to select from GPS, NAV 1 or NAV 2 inputs. The course reference pointer is set using the CRS knob on the GDU 1040 display. The selected course is shown digitally in a window above the upper RH 45° index mark. The course window will disappear approximately 3 seconds after the CRS knob stops turning. The selected navigation source will provide control input to the Bendix/King KAP 140 when the autopilot is engaged in NAV, APR or REV mode and is receiving a navigation signal from the selected GPS or VHF NAV radios.

(Continued Next Page)

FLIGHT INSTRUMENTS (Continued)

HORIZONTAL SITUATION INDICATOR (Continued)

WARNING

WHEN THE KAP 140 AUTOPILOT IS ENGAGED IN NAV, APR OR REV OPERATING MODES, IF THE HSI NAVIGATION SOURCE IS CHANGED FROM GPS TO NAV1, AUTOMATICALLY OR MANUALLY (USING THE CDI SOFTKEY), OR MANUALLY FROM NAV2 TO GPS, THE CHANGE WILL INTERRUPT THE NAVIGATION SIGNAL TO THE AUTOPILOT AND WILL CAUSE THE AUTOPILOT TO REVERT TO ROL MODE OPERATION. NO WARNING CHIME OR PFD ANNUNCIATION WILL BE PROVIDED. THE PREVIOUSLY-SELECTED MODE SYMBOL SHOWN ON THE AUTOPILOT DISPLAY WILL BE FLASHING TO SHOW THE REVERSION TO ROL MODE OPERATION. IN ROL MODE, THE AUTOPILOT WILL ONLY KEEP THE WINGS LEVEL AND WILL NOT CORRECT THE AIRPLANE HEADING OR COURSE. SET THE HDG BUG TO THE CORRECT HEADING AND SELECT THE CORRECT NAVIGATION SOURCE ON THE HSI USING THE CDI SOFTKEY BEFORE ENGAGING THE AUTOPILOT IN ANY OTHER OPERATING MODE.

VERTICAL SPEED INDICATOR

The vertical speed indicator (VSI) tape is found on the right side of the altimeter display along upper right side of the GDU 1040 Primary Flight Display. The vertical speed pointer moves up and down the fixed VSI scale and shows the rate of climb or descent in digits inside the pointer. The VSI tape has a notch on the right edge at the 0 feet/min index for reference. Rate of descent is shown with a negative sign in front of the digits. Vertical speed must exceed 100 feet/min in climb or descent before digits will appear in the VSI pointer.

GROUND CONTROL

Effective ground control while taxiing is accomplished through nose wheel steering by using the rudder pedals; left rudder pedal to steer left and right rudder pedal to steer right. When a rudder pedal is depressed, a spring loaded steering bungee (which is connected to the nose gear and to the rudder bars) will turn the nose wheel through an arc of approximately 10° each side of center. By applying either left or right brake, the degree of turn may be increased up to 30° each side of center.

Moving the airplane by hand is most easily accomplished by attaching a tow bar to the nose gear strut. If a tow bar is not available, or pushing is required, use the wing struts as push points. Do not use the vertical or horizontal surfaces to move the airplane. If the airplane is to be towed by vehicle, never turn the nose wheel more than 30° either side of center or structural damage to the nose gear could result.

The minimum turning radius of the airplane, using differential braking and nose wheel steering during taxi, is approximately 27 feet. To obtain a minimum radius turn during ground handling, the airplane may be rotated around either main landing gear by pressing down at the tailcone bulkhead just forward of the horizontal stabilizer to raise the nose wheel off the ground. Care should be exercised to ensure that pressure is exerted only at the bulkhead area and not on skin between the bulkheads. Pressing down on the horizontal stabilizer is not recommended.

WING FLAP SYSTEM

The single-slot type wing flaps (Refer to Figure 7-3), are extended or retracted by positioning the wing flap switch lever on the instrument panel to the desired flap deflection position. The switch lever is moved up or down in a slotted panel that provides mechanical stops at the 10°, 20° and 30° positions. To change flap setting, the flap lever is moved to the right to clear mechanical stops at the 10° and 20° positions. A scale and pointer to the left of the flap switch indicates flap travel in degrees. The wing flap system circuit is protected by a 10-ampere circuit breaker, labeled FLAP, on the left side of the control panel.

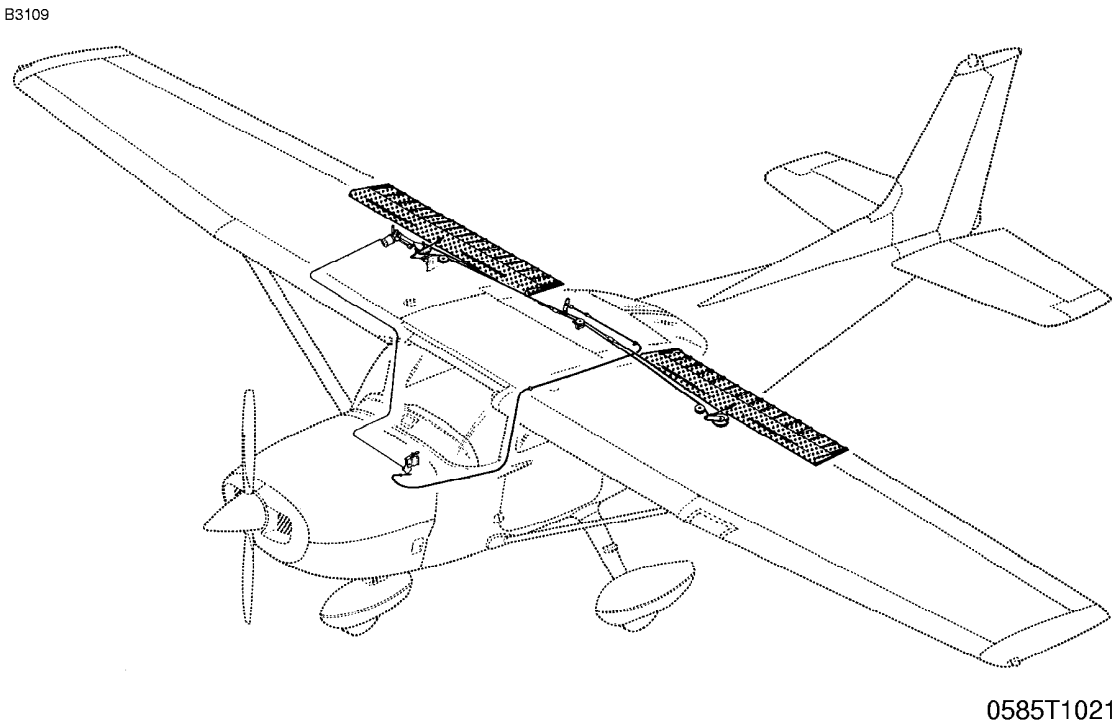

Figure 7-3. Wing Flap System

LANDING GEAR SYSTEM

The landing gear is of the tricycle type, with a steerable nose wheel and two main wheels. Wheel fairings are standard equipment for both the main and nose wheels. Shock absorption is provided by the tubular spring steel main landing gear struts and the air/oil nose gear shock strut. Each main gear wheel is equipped with a hydraulically actuated disc type brake on the inboard side of each wheel.

BAGGAGE COMPARTMENT

The baggage compartment consists of two areas, one extending from behind the rear passengers seat to the aft cabin bulkhead, and an additional area aft of the bulkhead. Access to both baggage areas is gained through a lockable baggage door on the left side of the airplane, or from within the airplane cabin. A baggage net with tiedown straps is provided for securing baggage and is attached by tying the straps to tiedown rings provided in the airplane. For baggage area and door dimensions, refer to Section 6.

SEATS

The seating arrangement consists of two vertically adjusting crew seats for the pilot and front seat passenger, and a single bench seat with adjustable back for rear seat passengers.

Seats used for the pilot and front seat passenger are adjustable fore and aft, and up and down. Additionally, the angle of the seat back is infinitely adjustable.

Fore and aft adjustment is made using the handle located below the center of the seat frame. To position the seat, lift the handle, slide the seat into position, release the handle and check that the seat is locked in place. To adjust the height of the seat, rotate the large crank under the right hand corner of the seat until a comfortable height is obtained. To adjust the seat back angle, pull up on the release button, located in the center front of seat, just under the seat bottom, position the seat back to the desired angle, and release the button. When the seat is not occupied, the seat back will automatically fold forward whenever the release button is pulled up.

(Continued Next Page)

SEATS (Continued)

The rear passengers' seat consists of a fixed, one piece seat bottom and a three-position, reclining back. The reclining back is adjusted by a lever located below the center of the seat frame. To adjust the seat back, raise the lever, position the seat back to the desired angle, release the lever and check that the back is locked in place.

Headrests are installed on both the front and rear seats. To adjust the headrest, apply enough pressure to it to raise or lower it to the desired level.

INTEGRATED SEAT BELT/SHOULDER HARNESS

All seat positions are equipped with integrated seat belts/shoulder harness assemblies (Refer to Figure 7-4). The design incorporates an overhead inertia reel for the shoulder portion, and a retractor assembly for the lap portion of the belt. This design allows for complete freedom of movement of the upper torso area while providing restraint in the lap belt area. In the event of a sudden deceleration, reels lock up to provide positive restraint for the user.

In the front seats, the inertia reels are located on the centerline of the upper cabin. In the rear seats, the inertia reels are located outboard of each passenger in the upper cabin.

To use the integrated seat belt/shoulder harness, grasp the link with one hand, and, in a single motion, extend the assembly and insert into the buckle. Positive locking has occurred when a distinctive ”snap” sound is heard.

(Continued Next Page)

INTEGRATED SEAT BELT/SHOULDER HARNESS
(Continued)

Proper locking of the lap belt can be verified by ensuring that the belts are allowed to retract into the retractors and the lap belt is snug and low on the waist as worn normally during flight. No more than one additional inch of belt should be able to be pulled out of the retractor once the lap belt is in place on the occupant. If more than one additional inch of belt can be pulled out of the retractor, the occupant is too small for the installed restraint system and the aircraft should not be occupied until the occupant is properly restrained.

Removal is accomplished by lifting the release mechanism on the buckle or by pressing the release button on the buckle and pulling out and up on the harness. Spring tension on the inertia reel will automatically stow the harness.

A manually adjustable seat belt/shoulder harness assembly is available for all seats.

To use the manually adjustable seat belt/shoulder harness, fasten and adjust the seat belt/shoulder harness first. Lengthen the seat belt as required by pulling on the release strap on the belt. Snap the connecting link firmly into the buckle, then adjust to length. A properly adjusted harness will permit the occupant to lean forward enough to sit erect, but prevent excessive forward movement and contact with objects during sudden deceleration. Also, the pilot must have the freedom to reach all controls easily.

Disconnecting the manually adjustable seat belt/shoulder harness is accomplished by pushing the button on the buckle to release the connecting link.

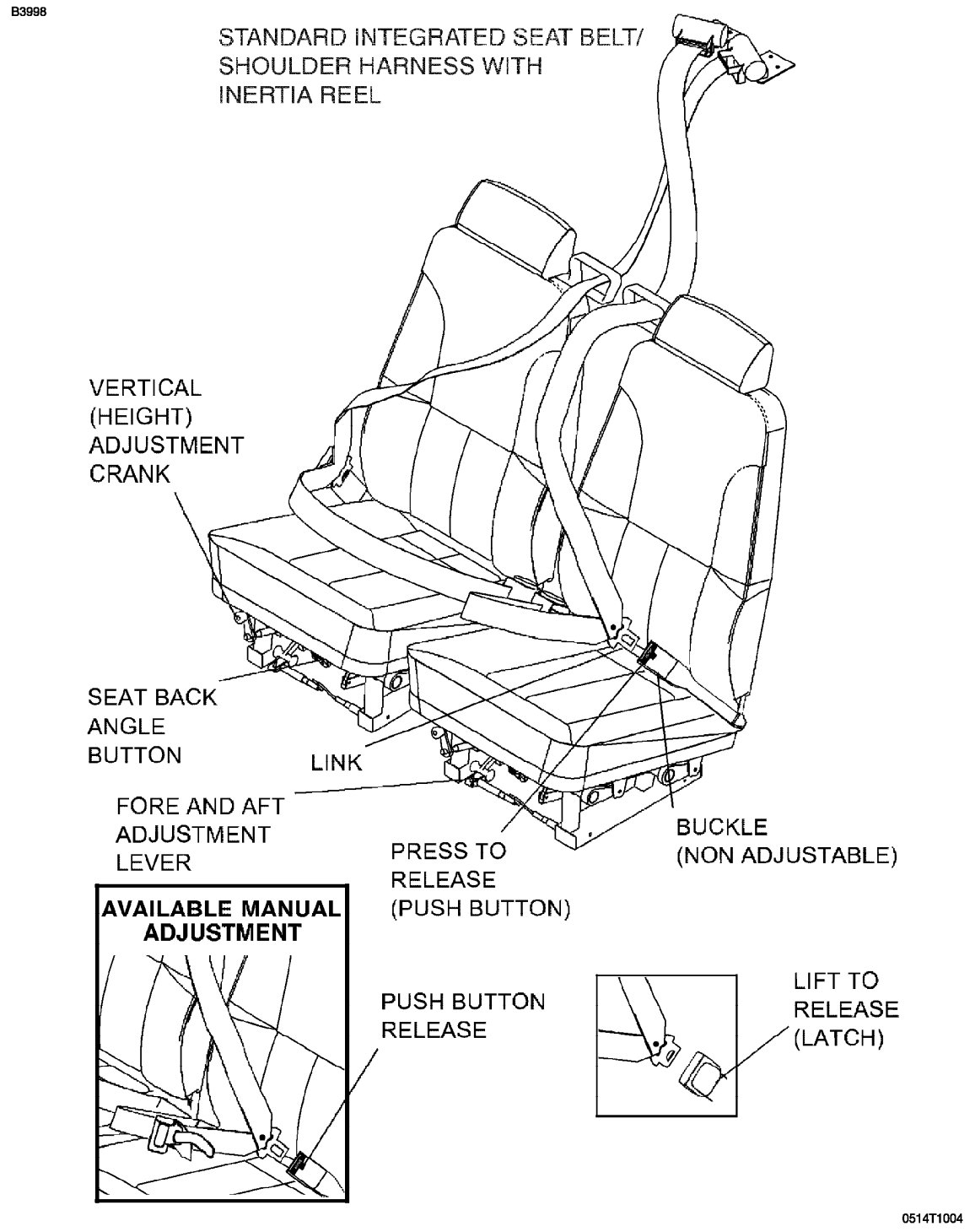

Figure 7-4. Integrated Seat Belt/Shoulder Harness

ENTRANCE DOORS AND CABIN WINDOWS

Entry to, and exit from the airplane is accomplished through either of two entry doors, one on each side of the cabin at the front seat positions (refer to Section 6 for cabin and cabin door dimensions). The doors incorporate a recessed exterior door handle, a conventional interior door handle, a key operated door lock (left door only), a door stop mechanism, and openable windows in both the left and right doors.

NOTE

The door latch design on this model requires that the outside door handle on the pilot and front passenger doors be extended out whenever the doors are open. When closing the door, do not attempt to push the door handle in until the door is fully shut.

To open the doors from outside the airplane, utilize the recessed door handle near the aft edge of either door by grasping the forward edge of the handle and pulling outboard. To close or open the doors from inside the airplane, use the combination door handle and arm rest. The inside door handle has three positions and a placard at its base which reads OPEN, CLOSE, and LOCK. The handle is spring loaded to the CLOSE (up) position. When the door has been pulled shut and latched, lock it by rotating the door handle forward to the LOCK position (flush with the arm rest). When the handle is rotated to the LOCK position, an over center action will hold it in that position. Both cabin doors should be locked prior to flight, and should not be opened intentionally during flight.

NOTE

Accidental opening of a cabin door in flight due to improper closing does not constitute a need to land the airplane. The best procedure is to set up the airplane in a trimmed condition at approximately 75 KIAS, momentarily shove the door outward slightly, and forcefully close and lock the door.

(Continued Next Page)

ENTRANCE DOORS AND CABIN WINDOWS
(Continued)

Exit from the airplane is accomplished by rotating the door handle from the LOCK position, past the CLOSE position, aft to the OPEN position and pushing the door open. To lock the airplane, lock the right cabin door with the inside handle, close the left cabin door, and using the ignition key, lock the door.

The left and right cabin doors are equipped with openable windows which are held in the closed position by a detent equipped latch on the lower edge of the window frame. To open the windows, rotate the latch upward. Each window is equipped with a spring- loaded retaining arm which will help rotate the window outward, and hold it there. If required, either window may be opened at any speed up to 163 KIAS. The rear side windows and rear windows are of the fixed type and cannot be opened.

CONTROL LOCKS

A control lock is provided to lock the aileron and elevator control surfaces to prevent damage to these systems by wind buffeting while the airplane is parked. The lock consists of a shaped steel rod and flag. The flag identifies the control lock and cautions about its removal before starting the engine. To install the control lock, align the hole in the top of the pilot's control wheel shaft with the hole in the top of the shaft collar on the instrument panel and insert the rod into the aligned holes. Installation of the lock will secure the ailerons in a neutral position and the elevators in a slightly trailing edge down position. Proper installation of the lock will place the flag over the ignition switch. In areas where high or gusty winds occur, a control surface lock should be installed over the vertical stabilizer and rudder. The control lock and any other type of locking device should be removed prior to starting the engine.

ENGINE

The airplane is powered by a horizontally opposed, four cylinder, overhead valve, air-cooled, fuel-injected engine with a wet sump lubrication system. The engine is a Lycoming Model IO-360-L2A and is rated at 180 horsepower at 2700 RPM. Major accessories include a starter and belt driven alternator mounted on the front of the engine, and dual magnetos, dual vacuum pumps, and a full flow oil filter mounted on the rear of the engine accessory case.

ENGINE CONTROLS

Engine power is controlled by a throttle located on the switch and control panel above the center pedestal. The throttle is open in the full forward position and closed in the full aft position. A friction lock, which is a round knurled knob, is located at the base of the throttle and is operated by rotating the lock clockwise to increase friction or counterclockwise to decrease it.

The mixture control, mounted adjacent to the throttle control, is a red knob with raised points around the circumference and is equipped with a lock button in the end of the knob. The rich position is full forward, and full aft is the idle cutoff position. For small adjustments, the control may be moved forward by rotating the knob clockwise, and aft by rotating the knob counterclockwise. For rapid or large adjustments, the knob may be moved forward or aft by depressing the lock button in the end of the control, and then positioning the control as desired.

(Continued Next Page)

ENGINE (Continued)

ENGINE INSTRUMENTS

The G1000 Engine Indicating System (EIS) provides graphical indicators and numeric values for engine, fuel, and electrical system parameters to the pilot. The EIS is shown in a vertical strip on the left side of the PFD during engine starts and on the MFD during normal operation. If either the MFD or PFD fails during flight, the EIS is shown on the remaining display.

The EIS consists of three pages that are selected using the ENGINE softkey. The ENGINE page provides indicators for Tachometer, Fuel Flow, Oil Pressure, Oil Temperature, Exhaust Gas Temperature (EGT), Vacuum, Fuel Quantity, Engine Hours, Electrical Bus Voltages, and Battery Currents. When the ENGINE softkey is pressed, the LEAN and SYSTEM softkeys appear adjacent to the ENGINE softkey. The LEAN page provides simultaneous indicators for CHT and EGT on all cylinders to be used for adjusting ("leaning") the fuel/air mixture. The SYSTEM page provides numerical values for parameters on the ENGINE page that are shown as indicators only. The SYSTEM page also provides a digital value for fuel flow (FFLOW GPH) and fuel used (GAL USED).

The GEA-71 Engine and Airframe Unit, located forward of the instrument panel, receives signals from the engine/system sensors for the parameters that are being monitored. The GEA-71 provides data to the EIS, which displays the data for the ENGINE page described below.

(Continued Next Page)

ENGINE (Continued)

RPM (TACHOMETER)

Engine speed (RPM) is shown by the tachometer indicator found on all EIS pages. The tachometer indicator uses a circular scale with moving pointer and a digital value. The pointer moves through a range from 0 to 3000 RPM. The numerical RPM value is displayed in increments of 10 RPM in white numerals below the pointer.

The normal engine speed operating limit (top of green arc) changes with altitude. For standard-day conditions, between sea level and 5000 ft., 2500 RPM is the upper limit of the normal operating range. From 5000 ft. to 10,000 ft., 2600 RPM is the top of the normal range. And above 10,000 ft., 2700 RPM is the upper limit of the normal operating range. When engine speed is 2780 RPM or more, the pointer, digital value, and label (RPM) turn red to show engine speed is more than the limit. The digital value and label (RPM) will flash. The engine speed (tachometer) is displayed in the same configuration and location on the LEAN and SYSTEM pages. If engine speed becomes 2780 RPM or more while on the LEAN or SYSTEM page, the display will return to the ENGINE page.

A speed sensor, mounted on the engine tachometer drive accessory pad, provides a digital signal to the GEA-71 Engine and Airframe Unit which processes and outputs the RPM data to the EIS. A red X through the RPM indicator shows the indicating system is inoperative.

FUEL FLOW

Fuel flow is displayed on the ENGINE page by the FFLOW GPH horizontal indicator. The indicator range is from 0 to 20 GPH with 2 GPH graduations. A green arc from 0 to 12 GPH is the normal operating range. A white pointer indicates the measured fuel flow.

A digital value for FFLOW GPH is included on both the EIS LEAN and SYSTEM pages.

(Continued Next Page)

ENGINE (Continued)

FUEL FLOW (Continued)

The fuel flow transducer is located in the engine fuel injection system between the fuel/air control unit (servo) and the fuel distribution manifold (flow divider). The transducer provides a digital signal to the GEA-71 for display on the EIS. A red X through the indicator means the indicating system is inoperative.

OIL PRESSURE

Engine oil pressure is shown on the ENGINE page by the OIL PRES horizontal indicator. The indicator range is 0 to 120 PSI with a red arc from 0 to 20 PSI, a green arc from 50 to 90 PSI (normal operating range) and a red arc from 115 to 120 PSI. A white pointer indicates actual oil pressure. Oil pressure is shown numerically on the SYSTEM page.

When oil pressure is 0 to 20 PSI or 115 to 120 PSI, the pointer, digital value, and label (OIL PRES) will change to red to show that oil pressure is outside normal limits. If oil pressure exceeds either the upper or lower limit while on the LEAN or SYSTEM page, the EIS will return to the ENGINE page.

When the engine speed (RPM) is in the green arc and the oil temperature is in the green arc, the oil pressure should be in the green arc. If oil pressure is below the green arc or above the green arc, adjust the engine speed to maintain adequate oil pressure. When engine speed is at idle or near idle, the oil pressure indication must be above the lower red arc. With the engine at normal operating oil temperature, and engine speed at or close to idle, oil pressure below the green arc (but above the lower red arc) is acceptable.

(Continued Next Page)

ENGINE (Continued)

OIL PRESSURE (Continued)

In cold weather, the oil pressure will initially be high (close to the upper red arc when the engine is started). As the engine and oil warm up, the oil pressure will come down into the green arc.

The oil pressure transducer, connected to the engine forward oil pressure port, provides a signal to the GEA-71 that is processed and shown as oil temperature on the EIS. A separate low oil pressure switch causes an "OIL PRESSURE" annunciation on the PFD when oil pressure is 0 to 20 PSI. A red X through the oil pressure indicator means that the indicating system is inoperative.

OIL TEMPERATURE

Engine oil temperature is displayed on the ENGINE page by the OIL TEMP horizontal indicator. The indicator range is from 75°F to 250°F with a green arc (normal operating range) from 100°F to 245°F and a red arc from 245°F to 250°F. A white pointer indicates actual oil temperature. Oil temperature is displayed numerically on the SYSTEM page.

When oil temperature is in the red band, 245°F to 250°F, the pointer and OIL TEMP turn red and flash to show oil temperature is higher than the limit. If oil temperature becomes hotter than 245°F while on the LEAN or SYSTEM page, the display will default to the ENGINE page.

The oil temperature sensor is installed in the engine oil filter adapter and provides a signal to the GEA-71 that is processed and shown as oil pressure on the EIS. A red X through the indicator shows that the indicating system is inoperative.

(Continued Next Page)

ENGINE (Continued)

CYLINDER HEAD TEMPERATURE

The cylinder head temperature (CHT) for all cylinders is displayed on the LEAN page. The cylinder with the hottest CHT is indicated by a cyan bar graph. The indicator range is from 100°F to 500°F, with a red line at 500°F. When a CHT is 500°F or hotter, the "CHT °F" legend and the temperature value will change to red to show that the cylinder head temperature is greater than the limit.

A thermocouple is installed in each cylinder head to provide the signal to the GEA-71 that is processed and shown as cylinder head temperature on the EIS. The LEAN page will show a red X over any cylinder that has a probe or wiring failure.

EXHAUST GAS TEMPERATURE

Exhaust gas temperature (EGT) is displayed on the ENGINE page by the EGT horizontal indicator. The indicator range is from 1250°F to 1650°F. The white pointer indicates relative exhaust gas temperature while the number inside of the pointer identifies the hottest cylinder. The EGT for all cylinders is shown on the LEAN page. The hottest cylinder is indicated by the cyan bar graph. The EGT for a particular cylinder may be shown by using the CYL SLCT softkey to select the desired cylinder. Automatic indication of the hottest cylinder will resume a short time after the CYL SLCT is last selected.

A thermocouple in the exhaust pipe of each cylinder measures exhaust gas temperature and provides a voltage to the GEA-71 that is processed and shown as exhaust gas temperature on the EIS LEAN page. The LEAN page will show a red X over a cylinder that has a probe or wiring failure.

NEW ENGINE BREAK-IN AND OPERATION

The engine underwent a run in at the factory and is ready for the full range of use. It is, however, suggested that cruising be accomplished at 75% power as much as practicable until a total of 50 hours has accumulated or oil consumption has stabilized. This will ensure proper seating of the piston rings.

(Continued Next Page)

ENGINE (Continued)

ENGINE LUBRICATION SYSTEM

The engine utilizes a full-pressure, wet-sump type lubrication system with aviation-grade oil used as the lubricant. The capacity of the engine sump (located on the bottom of the engine) is eight quarts. Oil is drawn from the sump through an oil suction strainer screen into the engine-driven oil pump. From the pump, oil is routed to a bypass valve. If the oil is cold, the bypass valve allows the oil to bypass the oil cooler and go directly from the pump to the full flow oil filter. If the oil is hot, the bypass valve routes the oil out of the accessory housing and into a flexible hose leading to the oil cooler on the right, rear engine baffle. Pressure oil from the cooler returns to the accessory housing where it passes through the full flow oil filter. The filter oil then enters a pressure relief valve which regulates engine oil pressure by allowing excessive oil to return to the sump while the balance of the oil is circulated to various engine parts for lubrication. Residual oil is returned to the sump by gravity flow.

An oil filler cap/oil dipstick is located at the right rear of the engine. The filler cap/ dipstick is accessible through an access door on the top right side of the engine cowling. The engine should not be operated on less than five quarts of oil. For extended flight, fill to eight quarts (dipstick indication only). For engine oil grade and specifications, refer to Section 8 of this handbook.

IGNITION AND STARTER SYSTEM

Engine ignition is provided by two engine-driven magnetos, and two spark plugs in each cylinder. The right magneto fires the lower right and upper left spark plugs, and the left magneto fires the lower left and upper right spark plugs. Normal operation is conducted with both magnetos due to the more complete burning of the fuel/air mixture with dual ignition.

(Continued Next Page)

ENGINE (Continued)

IGNITION AND STARTER SYSTEM (Continued)

Ignition and starter operation is controlled by a rotary-type switch located on the left switch and control panel. The MAGNETOS switch is labeled clockwise, OFF, R, L, BOTH, and START. The engine should be operated on both magnetos (BOTH position) except for magneto checks. The R and L positions are for checking purposes and emergency use only. When the MAGNETOS switch is rotated to the spring loaded START position, (with the master switch in the ON position), the starter contactor is closed and the starter, now energized, will crank the engine. When the switch is released, it will automatically return to the BOTH position.

AIR INDUCTION SYSTEM

The engine air induction system receives ram air through an intake on the lower front portion of the engine cowling. The intake is covered by an air filter which removes dust and other foreign matter from the induction air. Airflow passing through the filter enters an air box. The air box has a spring-loaded alternate air door. If the air induction filter should become blocked, suction created by the engine will open the door and draw unfiltered air from inside the lower cowl area. An open alternate air door will result in an approximate 10% power loss at full throttle. After passing through the air box, induction air enters a fuel/air control unit under the engine, and is then ducted to the engine cylinders through intake manifold tubes.

EXHAUST SYSTEM

Exhaust gas from each cylinder passes through riser assemblies to a muffler and tailpipe. Outside air is pulled in around shrouds which are constructed around the outside of the muffler to form heating chambers which supply heat to the cabin.

(Continued Next Page)

ENGINE (Continued)

FUEL INJECTION SYSTEM

The engine is equipped with a fuel injection system. The system is comprised of an engine-driven fuel pump, fuel/air control unit, fuel manifold, fuel flow indicator, and air-bleed type injector nozzles.

Fuel is delivered by the engine-driven fuel pump to the fuel/air control unit. The fuel/air control unit correctly proportions the fuel flow to the induction air flow. After passing through the control unit, induction air is delivered to the cylinders through the intake manifold tubes and metered fuel is delivered to a fuel manifold (flow divider). The fuel manifold, through spring tension on a diaphragm and valve, evenly distributes the fuel to an air-bleed type injector nozzle in the intake valve chamber of each cylinder. A turbine-type fuel flow transducer mounted between the fuel/air control unit and the fuel distribution unit produces a digital signal that displays fuel flow on the EIS pages.

COOLING SYSTEM

Ram air for engine cooling enters through two intake openings in the front of the engine cowling. The cooling air is directed around the cylinders and other areas of the engine by baffling, and is then exhausted through an opening at the bottom aft edge of the cowling. No manual cowl flap cooling system control is required.

PROPELLER

The airplane is equipped with a two bladed, fixed pitch, one-piece forged aluminum alloy propeller which is anodized to retard corrosion. The propeller is 76 inches in diameter.

FUEL SYSTEM

The airplane fuel system (see Figure 7-6) consists of two vented integral fuel tanks (one tank in each wing), a three-position selector valve, auxiliary fuel pump, fuel shutoff valve, fuel strainer, engine driven fuel pump, fuel/air control unit, fuel distribution valve and fuel injection nozzles.

(Continued Next Page)

FUEL SYSTEM (Continued)

WARNING

UNUSABLE FUEL LEVELS FOR THIS AIRPLANE WERE DETERMINED IN ACCORDANCE WITH FEDERAL AVIATION REGULATIONS. FAILURE TO OPERATE THE AIRPLANE IN COMPLIANCE WITH FUEL LIMITATIONS SPECIFIED IN SECTION 2 MAY FURTHER REDUCE THE AMOUNT OF FUEL AVAILABLE IN FLIGHT.

FUEL QUANTITY DATA IN U.S. GALLONS

FUEL TANKS	FUEL LEVEL (QUANTITY EACH TANK)	TOTAL FUEL	TOTAL UNUSABLE	TOTAL USABLE ALL FLIGHT CONDITIONS
Two	Full (28.0)	56.0	3.0	53.0

Figure 7-5. Fuel System

FUEL DISTRIBUTION

Fuel flows by gravity from the two wing tanks to a three-position selector valve, labeled BOTH, RIGHT and LEFT and on to the reservoir tank. From the reservoir tank fuel flows through the auxiliary fuel pump, past the fuel shutoff valve, through the fuel strainer to an engine driven fuel pump.

From the engine-driven fuel pump, fuel is delivered to the fuel/air control unit, where it is metered and directed to a fuel distribution valve (manifold) which distributes it to each cylinder. Fuel flow into each cylinder is continuous, and flow rate is determined by the amount of air passing through the fuel/air control unit.

(Continued Next Page)

FUEL SYSTEM (Continued)

FUEL INDICATING SYSTEM

Fuel quantity is measured by two float-type fuel quantity sensors (one in each tank) and is displayed on all Engine Indicating System (EIS) pages. The indicators are marked in gallons of fuel. An empty tank is displayed on the fuel quantity indicator (FUEL QTY GAL) as a red line on the far left of the indicator scale, and the number "0". When an indicator shows an empty tank, approximately 1.5 gallons of unusable fuel remain in the tank. The indicators should not be relied upon for accurate readings during skids, slips or unusual attitudes.

The fuel quantity indicator shows the fuel available in the tank up to the limit of the sensor float travel. At this level, additional fuel may be added to completely fill the tank, but no additional movement of the float or the indicator will result. The limit for sensor float travel is approximately 24 gallons and is indicated by the maximum limit of the green arc. When the fuel level decreases below maximum travel of the fuel sensor, the fuel quantity indicator will display fuel quantity measured in each tank. A visual check of each wing tank fuel level must be performed prior to each flight. Compare the visual fuel level and indicated fuel quantity to accurately estimate usable fuel.

The fuel quantity indicators detect low fuel conditions and incorrect sensor outputs. When fuel quantity is less than 5 gallons indicated (and remains less than this level for more than 60 seconds), LOW FUEL L (left) and or LOW FUEL R (right) will be displayed in amber on the PFD and a tone will sound. The fuel quantity indicator pointer(s) and indicator label will change from white to steady amber. When fuel quantity reaches the calibrated usable fuel empty level, the LOW FUEL L and or LOW FUEL R remain amber and the indicator pointer(s) and label change to flashing red.

NOTE

Takeoff is not recommended if both fuel tank pointers are in the yellow arc range and/or any LOW FUEL annunciator is on.

(Continued Next Page)

FUEL SYSTEM (Continued)

FUEL INDICATING SYSTEM (Continued)

In addition to low fuel annunciation, the warning logic is designed to report failures with each transmitter caused by short or open circuit conditions. If the circuit detects any one of these conditions, the affected fuel indicator will display a red "X". A red X through the top part of the indicator indicates a sensor failure in the left tank. A red X through the bottom part of the indicator indicates a sensor failure in the right tank.

Fuel flow is measured by use of a turbine type transducer mounted between the fuel/air control unit and the fuel distribution unit. This flow meter produces a digital signal that is displayed as the rate of fuel flow on the FFLOW GPH indicator on the EIS pages. FFLOW GPH is either a horizontal analog indicator or a digital value, depending on the active EIS page. For fuel consumption information, a fuel totalizer function is provided on the SYSTEM EIS page as GAL USED. This digital indicator shows total fuel used since last reset of the totalizer. To reset the fuel totalizer, the SYSTEM EIS page must be active and the softkey RST USED must be selected. The fuel totalizer provides no indication of the amount of fuel remaining in each tank, and should only be used in conjunction with other fuel management procedures to estimate total fuel remaining.

AUXILIARY FUEL PUMP OPERATION

The auxiliary fuel pump is used primarily for priming the engine before starting. Priming is accomplished through the fuel injection system. If the auxiliary FUEL PUMP switch is accidentally placed in the ON position for prolonged periods (with MASTER switch turned on and mixture rich) with the engine stopped, the engine may be flooded.

The auxiliary fuel pump is also used for vapor suppression in hot weather. Normally, momentary use will be sufficient for vapor suppression; however, continuous operation is permissible if required. Turning on the auxiliary fuel pump with a normally operating engine pump will result in only a very minor enrichment of the mixture.

(Continued Next Page)

FUEL SYSTEM (Continued)

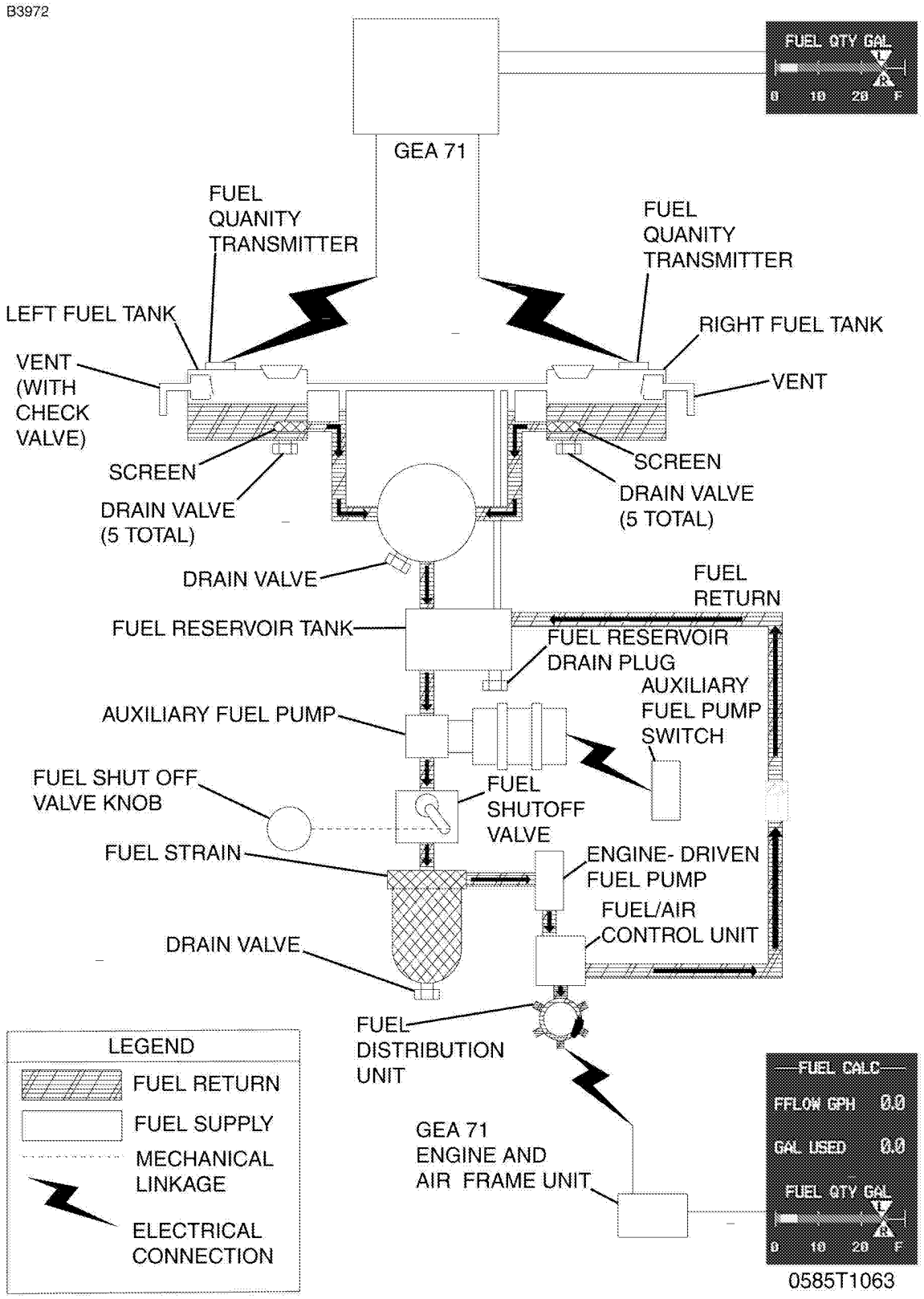

Figure 7-6. Fuel System

FUEL SYSTEM (Continued)

AUXILIARY FUEL PUMP OPERATION (Continued)

It is not necessary to operate the auxiliary fuel pump during normal takeoff and landing, since gravity and the engine-driven pump will supply adequate fuel flow. In the event of failure of the engine-driven fuel pump, use of the auxiliary fuel pump will provide sufficient fuel to maintain flight at maximum continuous power.

FUEL RETURN SYSTEM

A fuel return system helps provide smooth engine operation on the ground during hot weather. The return system carries a metered amount of fuel from the engine fuel-air control unit to the fuel reservoir tank. The increased fuel flow due to the return system results in lower fuel temperatures at the engine inlet, and helps to minimize the amount of fuel vapor generated in the fuel lines during high OAT operations. See Section 4 for Hot Weather operating information.

FUEL VENTING

Fuel system venting is essential to system operation. Blockage of the system will result in decreasing fuel flow and eventual engine stoppage. Venting is accomplished by an interconnecting line from the right fuel tank to the left tank. The left fuel tank is vented overboard through a vent line, equipped with a check valve, which protrudes from the bottom surface of the left wing near the wing strut. Both fuel filler caps are also vented.

REDUCED TANK CAPACITY

The airplane may be serviced to a reduced capacity to permit heavier cabin loadings. This is accomplished by filling each tank to the bottom edge of the fuel filler tab, thus giving a reduced fuel load of 17.5 gallons usable in each tank.

(Continued Next Page)

FUEL SYSTEM (Continued)

FUEL SELECTOR VALVE

The FUEL SELECTOR valve should be in the BOTH position for takeoff, climb, landing, and maneuvers that involve prolonged slips or skids of more than 30 seconds. Operation from either LEFT or RIGHT tank is reserved for cruising flight.

NOTE

- When the FUEL SELECTOR valve handle is in the BOTH position in cruising flight, unequal fuel flow from each tank may occur if the wings are not maintained exactly level. Resulting wing heaviness can be alleviated gradually by turning the selector valve handle to the tank in the "heavy" wing. It is not practical to measure the time required to consume all of the fuel in one tank, and, after switching to the opposite tank, expect an equal duration from the remaining fuel. The airspace in both fuel tanks is interconnected by a vent line and, therefore, some sloshing of fuel between tanks can be expected when the tanks are nearly full and the wings are not level.
- When the fuel tanks are 1/4 full or less, prolonged uncoordinated flight such as slips or skids can uncover the fuel tank outlets. Therefore, if operating with one fuel tank dry or if operating on LEFT or RIGHT tank when 1/4 full or less, do not allow the airplane to remain in uncoordinated flight for periods in excess of 30 seconds.

FUEL DRAIN VALVES

The fuel system is equipped with drain valves to provide a means for the examination of fuel in the system for contamination and grade. The system should be examined before each flight and after each refueling, by using the sampler cup provided to drain fuel from each wing tank sump, the fuel reservoir sump, the fuel selector drain and the fuel strainer sump. If any evidence of fuel contamination is found, it must be eliminated in accordance with the Preflight Inspection checklist and the discussion in Section 8 of this publication. If takeoff weight limitations for the next flight permit, the fuel tanks should be filled after each flight to prevent condensation.

BRAKE SYSTEM

The airplane has a single-disc, hydraulically actuated brake on each main landing gear wheel. Each brake is connected, by a hydraulic line, to a master cylinder attached to each of the pilot's rudder pedals. The brakes are operated by applying pressure to the top of either the left (pilot's) or right (copilot's) set of rudder pedals, which are interconnected. When the airplane is parked, both main wheel brakes may be set by utilizing the parking brake which is operated by a handle under the left side of the instrument panel. To apply the parking brake, set the brakes with the rudder pedals, pull the handle aft, and rotate it 90° down.

For maximum brake life, keep the brake system properly maintained, and minimize brake usage during taxi operations and landings.

Some of the symptoms of impending brake failure are: gradual decrease in braking action after brake application, noisy or dragging brakes, soft or spongy pedals, and excessive travel and weak braking action. If any of these symptoms appear, the brake system is in need of immediate attention. If, during taxi or landing roll, braking action decreases, let up on the pedals and then reapply the brakes with heavy pressure. If the brakes become spongy or pedal travel increases, pumping the pedals should build braking pressure. If one brake becomes weak or fails, use the other brake sparingly while using opposite rudder, as required, to offset the good brake.

ELECTRICAL SYSTEM

The airplane is equipped with a 28-volt direct current (DC) electrical system consisting of a belt-driven 60-ampere alternator and a 24-volt main storage battery (refer to Figure 7-7). The storage battery is located inside the engine cowling on the left firewall. The alternator and battery are controlled through the MASTER switch (ALT and BAT) found near the top of the pilot's switch panel.

Power is supplied to most electrical circuits through two primary buses (ELECTRICAL BUS 1 and ELECTRICAL BUS 2), with an Essential Bus and a crossfeed bus connected between the two primary buses to support essential equipment.

(Continued Next Page)

ELECTRICAL SYSTEM (Continued)

The system is equipped with a secondary or "standby" battery located between the firewall and the instrument panel. The STBY BATT switch controls power to or from the standby battery. The standby battery is available to supply power to the Essential Bus in the event that alternator and main battery power sources have both failed.

The primary buses are supplied with power whenever the MASTER switch (BAT) is turned on, and are not affected by starter or external power usage. Each primary bus is also connected to an avionics bus through a circuit breaker and the AVIONICS BUS 1 and BUS 2 switches. Each avionics bus is powered when the MASTER switch (BAT) and the corresponding AVIONICS switch is in the ON position.

CAUTION

BOTH BUS 1 AND BUS 2 AVIONICS SWITCHES SHOULD BE TURNED OFF TO PREVENT ANY HARMFUL TRANSIENT VOLTAGE FROM DAMAGING THE AVIONICS EQUIPMENT PRIOR TO TURNING THE MASTER SWITCH ON OR OFF,STARTING THE ENGINE OR APPLYING AN EXTERNAL POWER SOURCE

The airplane includes a power distribution module, located on the left forward side of the firewall, to house all the relays used in the airplane electrical system. The alternator control unit, main battery current sensor, and the external power connector are also housed within the module.

(Continued Next Page)

ELECTRICAL SYSTEM (Continued)

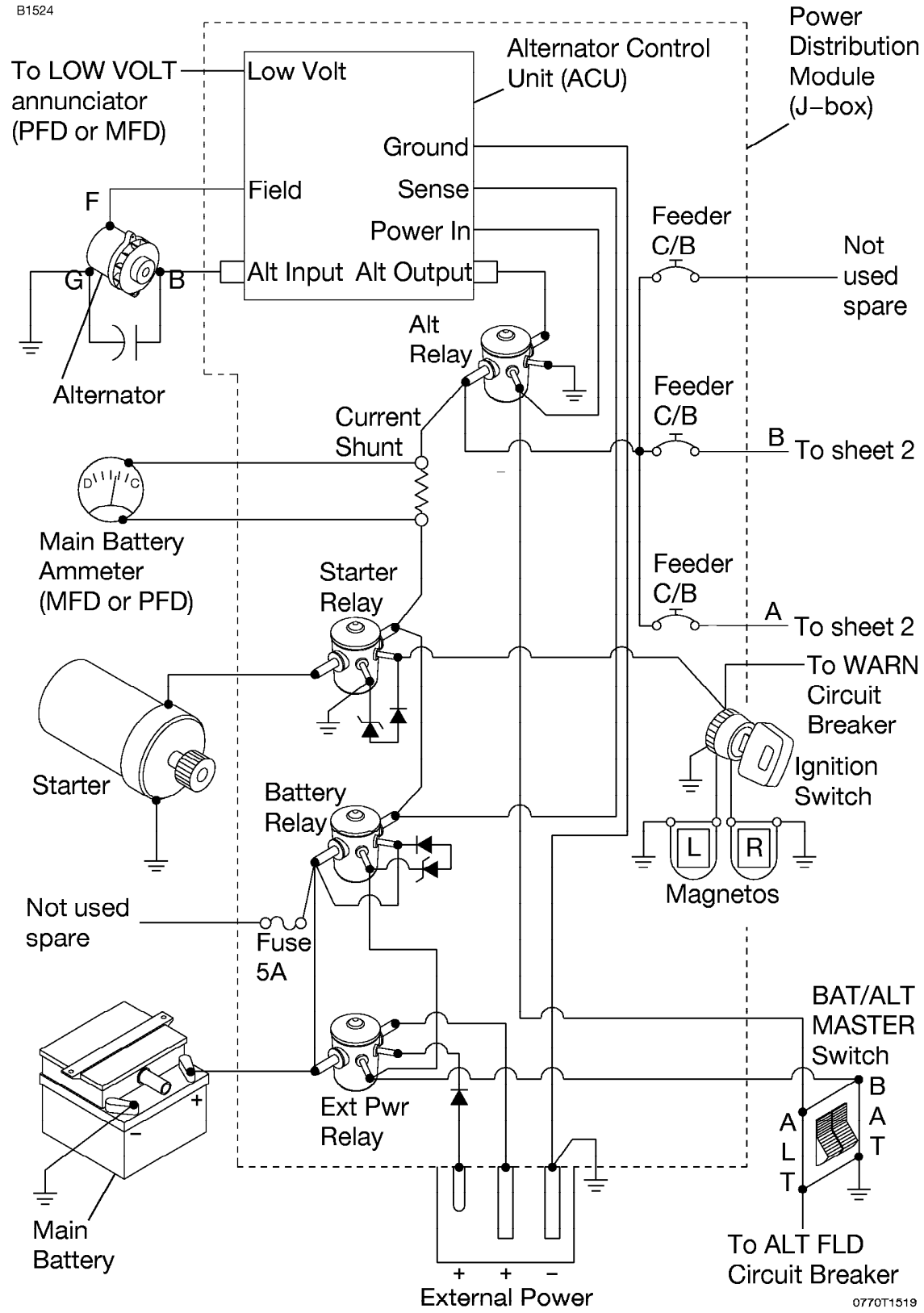

Figure 7-7 (Sheet 1 of 3)

ELECTRICAL SYSTEM (Continued)

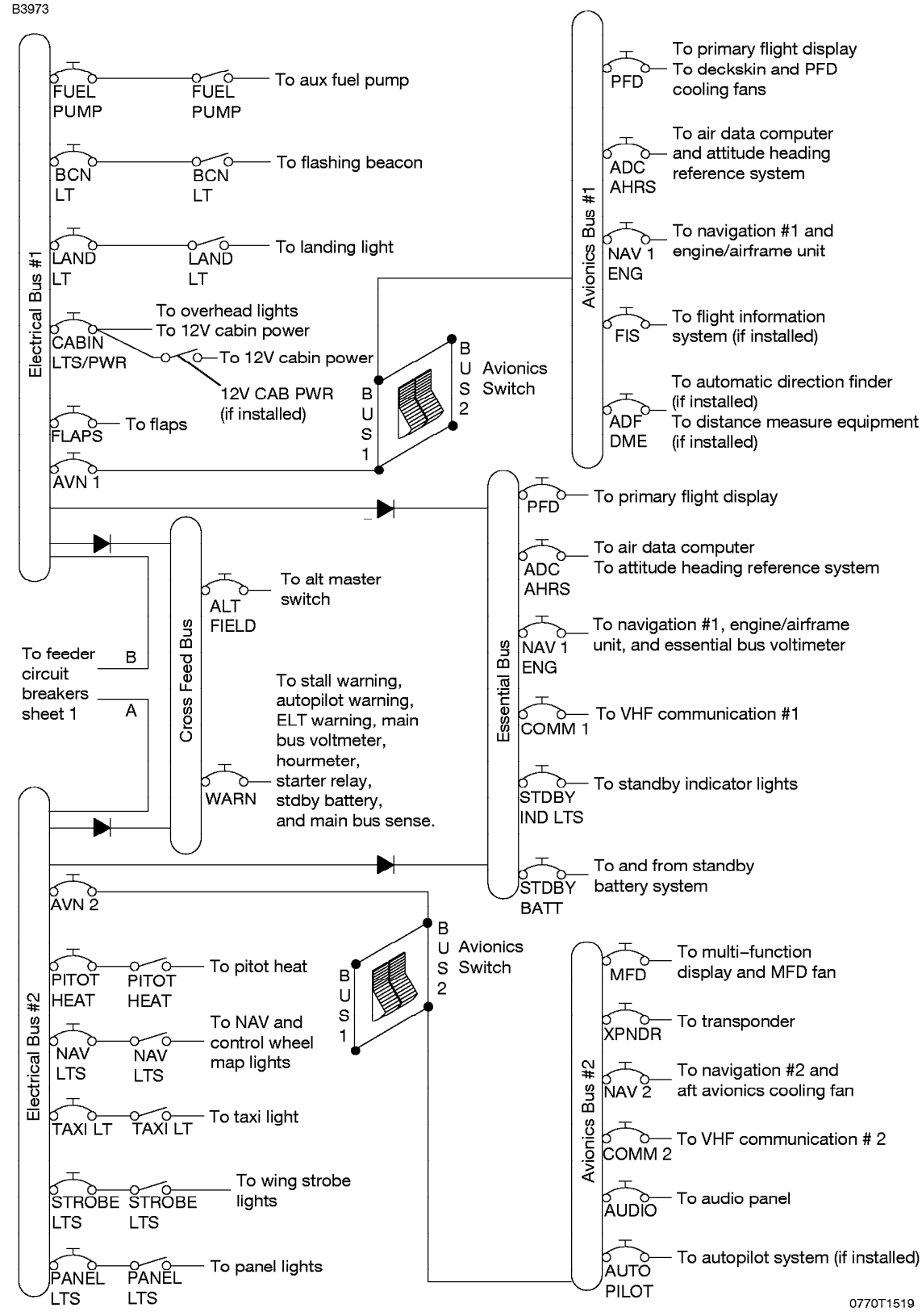

Figure 7-7 (Sheet 2)

ELECTRICAL SYSTEM (Continued)

B3766

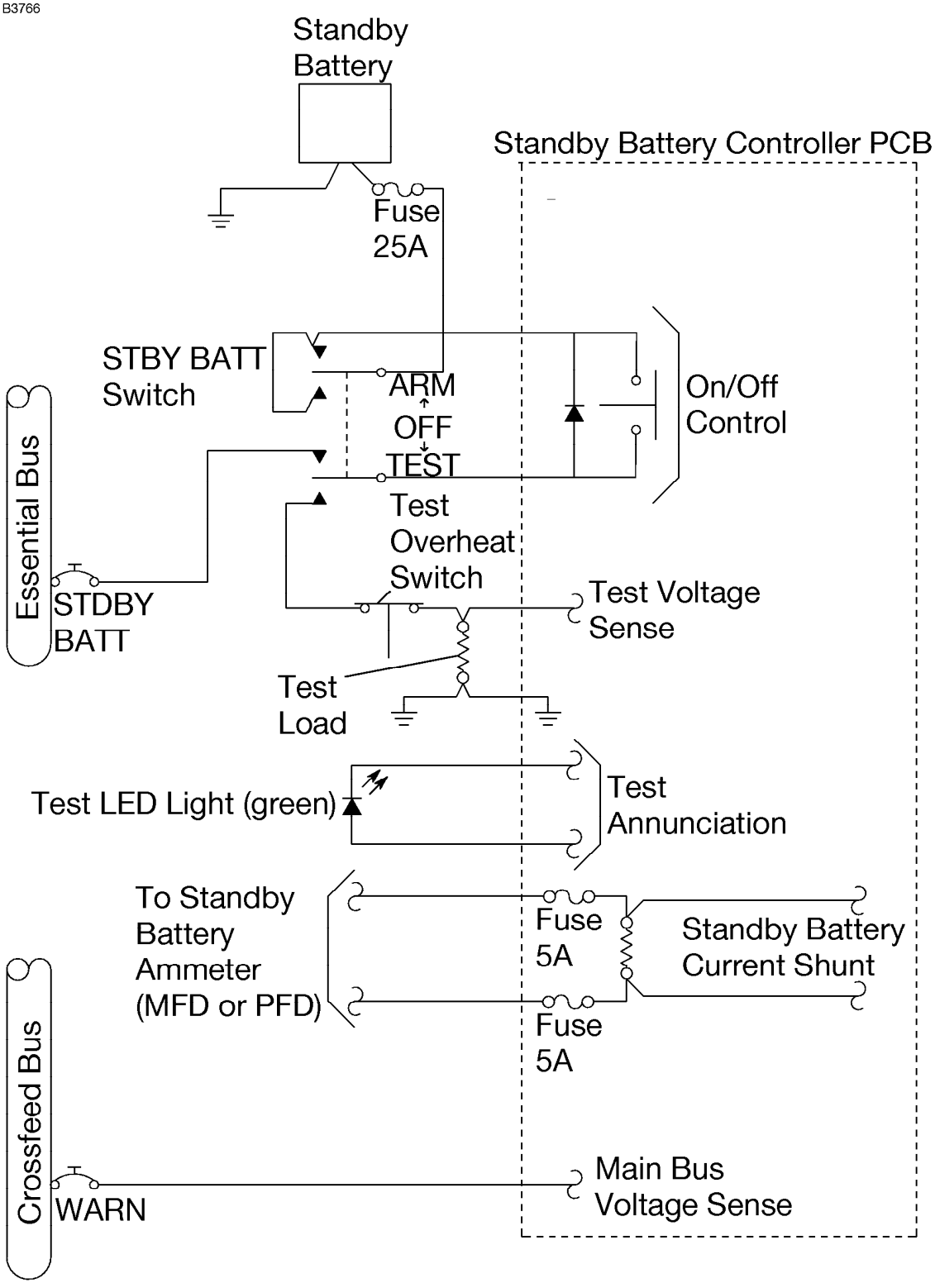

0770T1519

Figure 7-7 (Sheet 3)

ELECTRICAL SYSTEM (Continued)

G1000 ANNUNCIATOR PANEL

All system alerts, cautions and warnings are shown on the right side of the PFD screen adjacent to the vertical speed indicator. The following annunciations are supported:

OIL PRESSURE	LOW VACUUM
LOW FUEL L	LOW FUEL R
LOW VOLTS	PITCH TRIM
HIGH VOLTS	CO LVL HIGH (if installed)
STBY BAT	

Refer to the Garmin G1000 Cockpit Reference Guide Appendix A for more information on system annunciations.

MASTER SWITCH

The MASTER switch is a two-pole, rocker-type switch. The BAT side of the switch controls the main battery electrical power to the airplane. The ALT side of the switch controls the alternator system.

In normal operation, both sides of the switch (ALT and BAT) are ON simultaneously; however, the BAT side of the switch may be selected separately as necessary. The ALT side of the switch can not be set to ON without the BAT side of the switch also being set to ON.

If the alternator system fails, the MASTER switch may be set to the OFF position to preserve Main Battery capacity for later in the flight. With the MASTER switch OFF and the STBY BATT switch in the ARM position, the standby battery will power the Essential Bus for a limited time. Time remaining may be estimated by monitoring Essential Bus Voltage. At 20 Volts, the standby battery has little or no capacity remaining.

(Continued Next Page)

ELECTRICAL SYSTEM (Continued)

STANDBY BATTERY SWITCH

The STBY BATT master switch is a three position (ARM-OFF-TEST) switch that tests and controls the Standby battery system. The energy level of the battery shall be checked before starting the engine (Refer to Section 4) by placing the switch in the momentary TEST position and observing the correct illumination of the TEST lamp found to the right of the switch. Energy level tests after starting engine are not recommended.

Placing the switch in the ARM position during the engine start cycle allows the Standby battery to help regulate and filter Essential Bus voltage during the start cycle. The switch is set to the ARM position during normal flight operation to allow the Standby battery to charge and to be ready to power the Essential Bus in the event of alternator and main battery failure. Placing the switch in the OFF position disconnects the Standby battery from the Essential Bus. Operation with the STBY BATT switch in the OFF position prevents the Standby battery from charging and from automatically providing power should an electrical system failure occur.

AVIONICS SWITCH

The AVIONICS switch is a two-pole rocker-type switch that controls electrical power to AVIONICS BUS 1 and BUS 2. Placing either side of the rocker switch in the ON position supplies power to the corresponding avionics bus. Both sides of the AVIONICS switch should be placed in the OFF position before turning the MASTER switch ON or OFF, starting the engine, or applying an external power source.

(Continued Next Page)

ELECTRICAL SYSTEM (Continued)

ELECTRICAL SYSTEM MONITORING AND ANNUNCIATIONS

VOLTMETER

Voltage (VOLTS) indication for the Main and Essential buses is provided at the bottom of the EIS ENGINE or SYSTEM pages, labeled "M BUS E". Main bus voltage is shown numerically below the "M". Essential bus voltage is displayed numerically below the "E". The Main bus voltage is measured at the WARN circuit breaker on the Crossfeed (X-FEED) bus. The Essential bus voltage is measured at the NAV1 ENG circuit breaker on the Essential bus. Normal bus voltages with the alternator operating shall be about 28 volts. When the voltage for either Main or Essential is at or below 24.5 volts, the numeric value and VOLTS text turns red. This warning indication, along with the "LOW VOLTS" annunciation, is an indication that the alternator is not supplying all the power that is required by the aircraft. Indicated voltages between 24.5 and 28 volts may occur during low engine RPM conditions (Refer to note under LOW VOLTAGE ANNUNCIATION).

AMMETER

Electric current (AMPS) indication for both the main and Standby batteries is provided at the bottom of the EIS ENGINE or SYSTEM pages, labeled "M BATT S". Main battery current is numerically displayed below the "M". Standby battery current is displayed numerically below the "S". A positive current value (shown in white) indicates that the battery is charging. A negative current value (shown in amber) indicates that the battery is discharging. In the event the alternator is not functioning or the electrical load exceeds the output of the alternator, the main battery ammeter indicates the main battery discharge rate.

In the event that Standby battery discharge is required, normal discharge should be less than 4 Amps. After engine start, with the STBY BATT switch in the ARM position, the Standby Battery ammeter should indicate a charge showing correct charging of Standby Battery System.

(Continued Next Page)

ELECTRICAL SYSTEM (Continued)

LOW VOLTAGE ANNUNCIATION

A signal from the Alternator Control Unit (ACU), located inside the Power Distribution Module, provides the trigger for a red "LOW VOLTS" annunciation shown on the PFD. "LOW VOLTS" is displayed when the Main bus voltage measured in the junction box is below 24.5 volts. This warning annunciation is an indication that the alternator is not supplying the power that is required by the aircraft. If the conditions causing the warning can not be resolved, nonessential electrical loads should be eliminated and the flight should be terminated as soon as practicable.

NOTE

During low RPM operation, with a high electrical load on the system, such as during a low RPM taxi, the "LOW VOLTS" annunciation may come on, the bus voltage values may turn red, and Main battery ammeter discharge indications may occur. Under these conditions, increase RPM or decrease electrical loads to reduce demand on the battery.

In the event an overvoltage condition (or other alternator fault) occurs, the ACU will automatically open the ALT FIELD circuit breaker, removing alternator field current and stopping alternator output. The Main Battery will then supply current to the electrical system as shown by a discharge (negative number) on the M BAT ammeter. The LOW VOLTS annunciation will come on when the system voltage drops below 24.5 volts. Set the ALT FIELD circuit breaker to the ON position (push in) to energize the ACU. If the warning annunciation extinguishes and the Main Battery (M BATT) ammeter indicates positive current, normal alternator charging has resumed. If the annunciation comes on again, or the ALT FIELD circuit breaker opens again, an alternator malfunction has occurred. If the circuit breaker opens again, do not SET it to the ON position again. Have a qualified technician determine the cause and correct the malfunction. Turn off nonessential electrical loads and land as soon as practicable.

(Continued Next Page)

ELECTRICAL SYSTEM (Continued)

LOW VOLTAGE ANNUNCIATION (Continued)

ALT FIELD circuit breaker may open on occasion during normal engine starts due to transient overvoltages. Provided that normal alternator output is resumed after the ALT FIELD circuit breaker is reset, these occurrences are considered nuisance events. If the ALT FIELD circuit breaker opens after reset, do not close again. Repeated occurrences indicate a problem with the electrical system that must be corrected by a qualified maintenance technician before flight.

CIRCUIT BREAKERS AND FUSES

Individual system circuit breakers are found on the circuit breaker panel below the pilot's control wheel. All circuit breakers are "pullable" for electrical load management. Using a "pullable" circuit breaker as a switch is discouraged since the practice will decrease the life of the circuit breaker.

The Power Distribution Module uses three circuit breakers for the electrical bus feeders. A "fast blow" automotive type fuse is used at the Standby Battery. The Standby Battery current shunt circuit uses two field replaceable fuses located on the Standby Battery Controller printed circuit board.

Most Garmin G1000 equipment has internal non-field replaceable fuses. Equipment must be returned to Garmin by an approved service station for replacement.

EXTERNAL POWER RECEPTACLE

A external power receptacle is integral to the power distribution module and allows the use of an external power source for cold weather starting or for lengthy maintenance work on electrical and avionics equipment. The receptacle is located on the left side of the cowl near the firewall. Access to the receptacle is gained by opening the receptacle door.

(Continued Next Page)

ELECTRICAL SYSTEM (Continued)

EXTERNAL POWER RECEPTACLE (Continued)

NOTE

Set the AVIONICS switches BUS 1 and BUS 2 to OFF if no avionics are required. If maintenance on the avionics equipment is required, a 28 VDC regulated and filtered external power source must be provided to prevent damage to the avionics equipment from transient voltages. Set AVIONICS switches BUS 1 and BUS 2 to OFF before starting the engine.

The following check should be made whenever the engine has been started using external power (after disconnecting the external power source).

1. MASTER Switch (ALT and BAT) - OFF.
2. TAXI and LANDING Light Switches - ON.
3. Engine RPM - REDUCE to idle.
4. MASTER Switch (ALT and BAT) - ON (with taxi and landing lights turned on).
5. Engine RPM - INCREASE (to approximately 1500 RPM).
6. Main Battery (BAT) Ammeter - CHECK (battery to be charging, amps positive).
7. Low Voltage Annunciator - CHECK (no LOW VOLTS annunciation).

NOTE

If the Main Battery (M BATT) ammeter does not show a positive rate of charge or the low voltage warning annunciation does not go off, the battery should be removed from the airplane and properly serviced prior to flight.

LIGHTING SYSTEMS

EXTERIOR LIGHTING

Exterior lighting consists of navigation lights on the wing tips and the tip of the rudder, landing/taxi lights located on the left wing leading edge, a flashing beacon mounted on top of the vertical fin, and a strobe anticollision light on each wing tip.

Two courtesy lights are recessed into the lower surfaces of each wing and provide illumination for each cabin door area. The switch for the courtesy lights is found on the pilot's overhead console. Pressing the courtesy light switch will make the lights come on and pressing it again will make the lights go out.

All other exterior lights are operated by switches found on the lighted switch panel to the left of the PFD. Exterior lights are grouped together in the LIGHTS section of the switch panel. To activate the BEACON, LAND (Landing Light), TAXI (Taxi Light), NAV, and STROBE light(s), place the switch in the up position. Circuit breakers for the lights are found on the lighted circuit breaker panel on the lower left instrument panel, below the PFD. Circuit breakers are grouped by electrical bus with BEACON and LAND on ELECTRICAL BUS 1 and TAXI, NAV and STROBE on ELECTRICAL BUS 2.

NOTE

The strobes and flashing beacon should not be used when flying through clouds or overcast; the flashing light reflected from water droplets or particles in the atmosphere, particularly at night, can produce vertigo and loss of orientation.

(Continued Next Page)

LIGHTING SYSTEMS (Continued)

INTERIOR LIGHTING

Interior lighting is controlled by a combination of dimmable crew area flood lighting, internally illuminated switch and circuit breaker panels, avionics panel lighting, instrument lighting, pedestal lighting, pilot control wheel map lighting and passenger area flood lighting.

For airplane serials 172S9810 thru 172S10102, flood lighting is accomplished using one dimmable light in the front crew area and one dome light in the rear passenger area. Both lights are contained in the overhead console, and are controlled by either the dimmer control for the front light, and an on and off type push button switch for the rear light. The front light can be rotated to provide directional lighting for the pilot and front passenger. The rear dome light provides for general illumination in the rear cabin area. Rear dome light and courtesy lights share the same switch.

For airplane serials 172S10103 and On, flood lighting is accomplished using two dimmable lights in the front crew area and one dome light in the rear passenger area. These lights are contained in the overhead console, and are controlled by dimmer controls for the front lights, and an on and off type push button switch for the rear light. The front lights can be rotated to provide directional lighting for the pilot and front passenger. The rear dome light provides for general illumination in the rear cabin area. Rear dome light and courtesy lights share the same switch.

Lighting of the switch panel, circuit breaker panel, engine controls and environmental control panel is accomplished by using internally lighted LED lighted panels. Rotating the SW/CB PANELS dimmer, found on the switch panel in the DIMMING group, controls the lighting level for both panels. Rotating the dimmer counterclockwise decreases light intensity from the highest level to off.

Pedestal lighting consists of two hooded lights found at various locations on the pedestal. Rotating the PEDESTAL dimmer, found on the switch panel in the DIMMING group, controls the pedestal lights. Rotating the dimmer counterclockwise decreases light intensity from the highest level to off.

(Continued Next Page)

LIGHTING SYSTEMS (Continued)

INTERIOR LIGHTING (Continued)

Avionics panel lighting consists of the PFD and MFD bezel and display lighting, Audio Panel lighting, and, if installed, KAP 140 Flight Computer keys and display lighting. Rotating the AVIONICS dimmer, found on the switch panel in the DIMMING group, controls the lighting level. Positioning the dimmer control in the OFF position, rotated fully counterclockwise, causes the avionics displays to use internal photocells to automatically control the lighting levels. This is the recommended use of the avionics lighting for all day and lower lighting levels where lighting of the avionics bezels and keys is not required. In low to night lighting levels rotating the dimmer control clockwise from the OFF position places all avionics lighting level control to the AVIONICS dimmer control. This is the recommended use of avionics lighting for night and low lighting conditions to allow the pilot control of the avionics illumination levels as dark adaptation occurs.

Rotating the STDBY IND dimmer, found on the switch panel in the DIMMING group, controls lighting of the standby airspeed indicator, attitude indicator, altimeter and non-stabilized magnetic compass. Rotating the dimmer counterclockwise decreases light intensity from the highest level to off.

Pilot's chart lighting is accomplished by use of a rheostat and a light assembly, both found on the lower surface of the pilot's control wheel. The light provides downward illumination from the bottom of the control wheel to the pilot's lap area. To operate the light, first turn the NAV light switch ON, and then adjust the map light intensity using the knurled rheostat knob. Rotating the dimmer clockwise increases light intensity, and rotating the dimmer counterclockwise decreases light intensity.

(Continued Next Page)

LIGHTING SYSTEMS (Continued)

INTERIOR LIGHTING (Continued)

Regardless of the light system in question, the most probable cause of a light failure is a burned out bulb. However, in the event any lighting system fails to come on, check the appropriate circuit breaker. If the circuit breaker has opened, and there is no obvious indication of a short circuit (smoke or odor), turn the affected lights OFF, close the circuit breaker, and turn the lights ON again. If the circuit breaker opens again, do not reset until maintenance has been performed.

CABIN HEATING, VENTILATING AND DEFROSTING SYSTEM

The temperature and volume of airflow into the cabin can be regulated by manipulation of the push-pull CABIN HT and CABIN AIR controls (Refer to Figure 7-8). Both controls are the locking button type and permit intermediate settings.

For cabin ventilation, pull the CABIN AIR knob out. To raise the air temperature, pull the CABIN HT knob out approximately 1/4 to 1/2 inch for a small amount of cabin heat. Additional heat is available by pulling the knob out farther; maximum heat is available with the CABIN HT knob pulled out and the CABIN AIR knob pushed full in. When no heat is desired in the cabin, the CABIN HT knob is pushed full in.

Front cabin heat and ventilating air is supplied by outlet holes spaced across a cabin manifold just forward of the pilot's and front passenger's feet. Rear cabin heat and air is supplied by two ducts from the manifold, one extending down each side of the cabin to an outlet just aft of the rudder pedals at floor level. Windshield defrost air is also supplied by two ducts leading from the cabin manifold to defroster outlets near the lower edge of the windshield. Two knobs control sliding valves in either defroster outlet to permit regulation of defroster airflow.

(Continued Next Page)

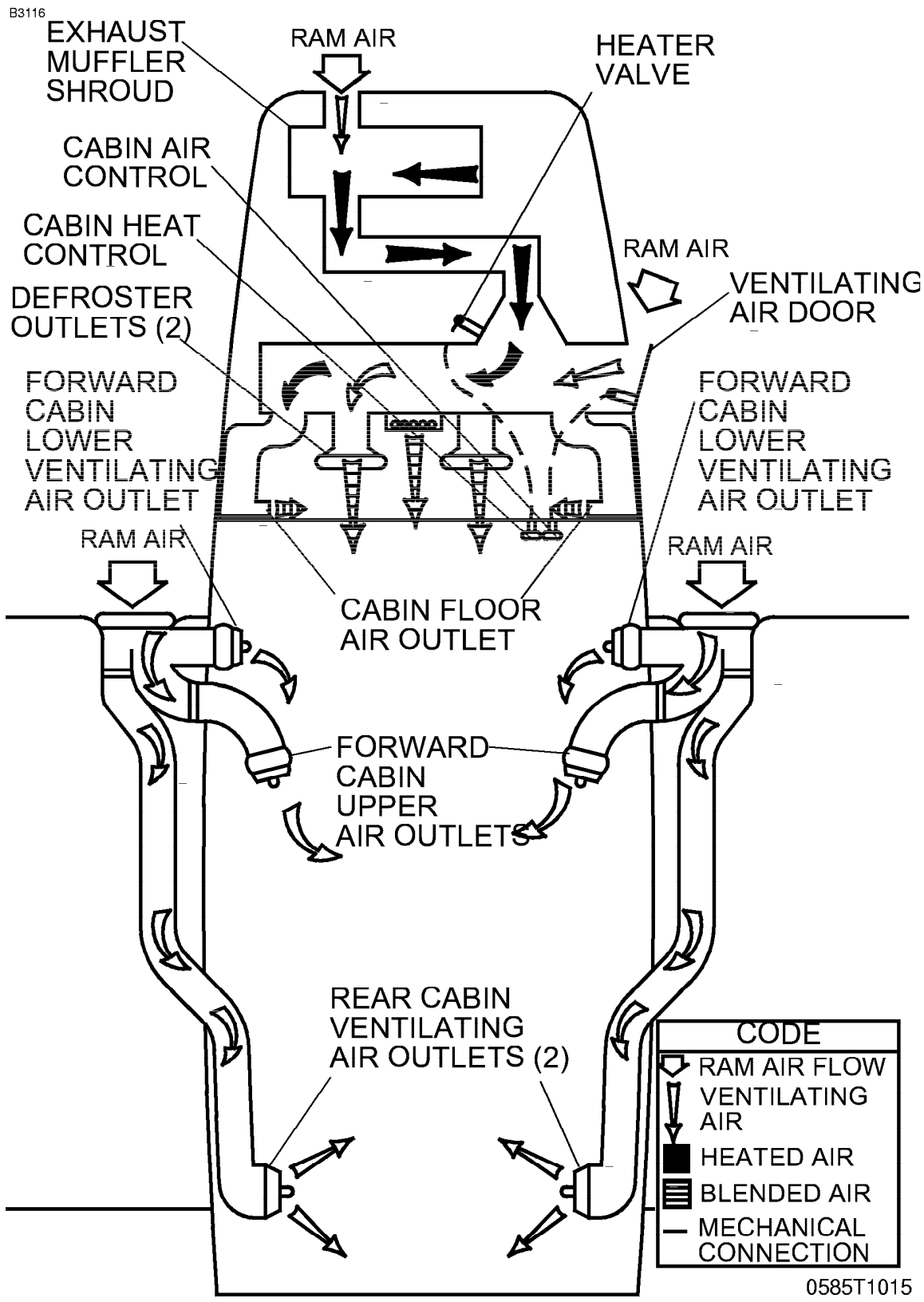

Figure 7-8. Cabin Heating, Ventilating and Defrosting System

CABIN HEATING, VENTILATING AND DEFROSTING SYSTEM (Continued)

Separate adjustable ventilators supply additional air; one near each upper corner of the windshield supplies air for the pilot and front passenger, and two ventilators are available for the rear cabin area to supply air to the rear seat passengers. There are additional ventilators located in various positions in the cockpit.

PITOT-STATIC SYSTEM AND INSTRUMENTS

The pitot-static system uses a heated total pressure (pitot) head mounted on the lower surface of the left wing, external static ports mounted on the left side of the forward fuselage and associated plumbing to connect the GDC 74A Air Data Computer and the conventional pitot-static instruments to the sources.

The heated pitot system uses an electrical heating element built in the body of the pitot head. The PITOT HEAT control switch is found on the switch panel below the lower LH corner of the PFD. The PITOT HEAT circuit breaker (10 A) is found on the circuit breaker panel at the lower LH side of the pilot panel.

A static pressure alternate source valve (ALT STATIC AIR) is located next to the throttle control. The ALT STATIC AIR valve provides static pressure from inside the cabin if the external static pressure source becomes blocked.

If erroneous instrument readings are suspected due to water or ice in the pressure line going to the standard external static pressure source, the alternate static source valve should be pulled on.

Pressures within the cabin will vary with open heaters/vents and windows. Refer to Section 5, Figure 5-1 (Sheet 2), for the Airspeed Calibration, Alternate Static Source correction chart.

VACUUM SYSTEM AND INSTRUMENTS

The vacuum system (refer to Figure 7-9) provides the vacuum necessary to operate the standby attitude indicator. The system consists of one engine-driven vacuum pump, a vacuum regulator, the standby attitude indicator, a vacuum system air filter, and a vacuum transducer. The GEA-71 Engine and Airframe unit receives the signal from the vacuum transducer and shows vacuum on the EIS ENGINE page. If vacuum available through the pump drops below 3.5 in.hg., LOW VACUUM will appear in amber on the PFD.

ATTITUDE INDICATOR

The standby attitude indicator is a vacuum-powered gyroscopic instrument, found on the center instrument panel below the MFD. The Attitude Indicator includes a low-vacuum warning "flag" ("GYRO") that comes into view when the vacuum is below the level necessary for reliable gyroscope operation.

VACUUM INDICATOR

The vacuum indicator is incorporated on the EIS ENGINE page, found along the left side of the PFD during engine start or the left edge of the MFD during normal operation. During reversionary operation, the EIS bar appears along the left side of the operational display.

LOW VACUUM ANNUNCIATION

A low vacuum condition is annunciated along the upper right side of the PFD by a amber "LOW VACUUM" text box.

VACUUM SYSTEM

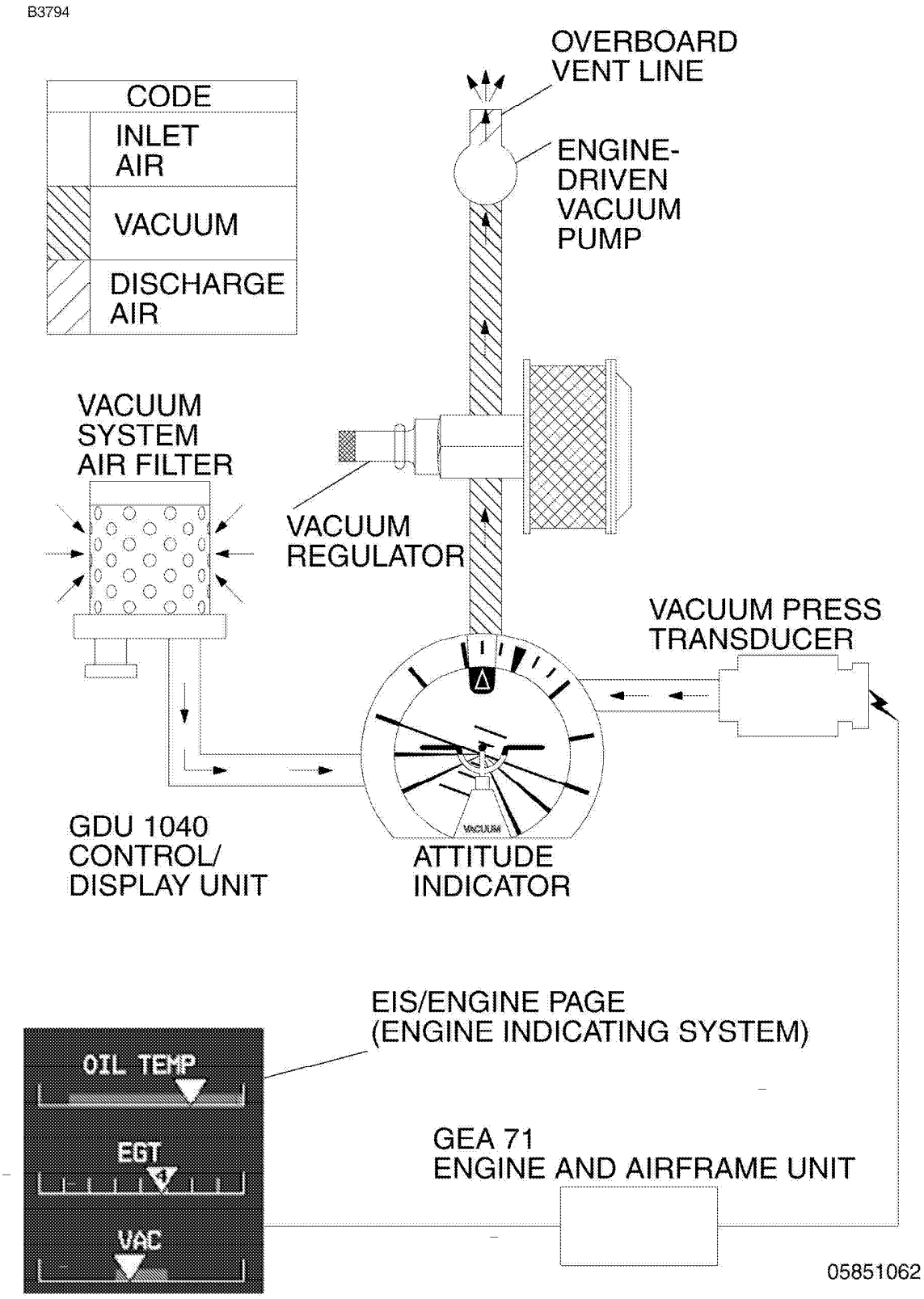

Figure 7-9. Vacuum System

CLOCK / O.A.T. INDICATOR

A numerical time or clock window (based on GPS time) and an outside air temperature (O.A.T.) indicator window are provided along the lower edge of the PFD. The O.A.T. indicator uses an air temperature sensor located on top of the cabin.

STALL WARNING SYSTEM

The airplane is equipped with a pneumatic type stall warning system consisting of an inlet in the leading edge of the left wing, an air-operated horn near the upper left corner of the windshield, and associated plumbing. As the airplane approaches a stall, the low pressure on the upper surface of the wings moves forward around the leading edge of the wings. This low pressure creates a differential pressure in the stall warning system which draws air through the warning horn, resulting in an audible warning at 5 to 10 knots above stall in all flight conditions.

STANDARD AVIONICS

The Garmin G1000 Avionics System is an integrated flight control and navigation system. The system combines primary flight instruments, communications, aircraft system information and navigational information all displayed on two color displays. The G1000 system consists of the following pieces of equipment:

GDU 1040 COLOR DISPLAY

Two identical units are mounted on the instrument panel. One, located in front of the pilot, is configured as a Primary Flight Display, or PFD. A second panel, located to the right, is configured as a Multi-Function Display, or MFD.

The PFD displays roll and pitch information, heading and course navigation information, plus altitude, airspeed and vertical speed information to the pilot. The PFD also controls and displays all communication and navigation frequencies as well as displaying warning/status annunciations of aircraft systems.

(Continued Next Page)

STANDARD AVIONICS (Continued)

GDU 1040 COLOR DISPLAY (Continued)

The MFD displays a large scalable, moving map that corresponds to the airplane's current location. Data from other components of the system can be overlaid on this map. Location and direction of movement of nearby aircraft, lightning and weather information can all be displayed on the MFD. The MFD is also the principle display of all of the engine parameters and fuel information.

A Reversionary Mode places the flight information and basic engine information on both the PFD and the MFD. This feature allows the pilot full access to all necessary information should either of the display screens malfunction.

GMA 1347 AUDIO PANEL

The GMA 1347 audio panel for the G1000 system integrates all of the communication and navigation digital audio signals, intercom system and marker beacon controls in one unit. It is installed on the instrument panel between the PFD and the MFD. The GMA 1347 also controls the Reversionary Mode for the PFD and MFD.

NOTE

Use of the COM 1/2 function is not approved.

GIA 63 INTEGRATED AVIONICS UNIT

Two GIA 63 units are installed in the G1000 system. They are mounted in racks in the tailcone, behind the baggage curtain. These units act as the main communications hub linking all of the other peripheral parts to the GDU 1040 displays. Each unit contains a GPS receiver, a VHF navigation receiver, VHF communication transceiver and the main system microprocessors. The first GIA 63 unit to acquire a GPS satellite 3-D navigation signal is the active GPS source.

(Continued Next Page)

STANDARD AVIONICS (Continued)

GRS 77 ATTITUDE HEADING REFERENCE SYSTEM (AHRS) AND GMU 44 MAGNETOMETER

The GRS 77 AHRS provides airplane attitude and flight characteristics information to the G1000 displays and to the GIA 63 units. It is located in the tailcone of the airplane. The unit contains accelerometers, tilt sensors and rate sensors that replace spinning mass gyros used in other airplanes. The GMU 44 Magnetometer is located inside the left wing panel. It interfaces with the AHRS to provide heading information.

GDC 74A AIR DATA COMPUTER

The GDC 74A Air Data Computer (ADC) compiles information from the aircraft's pitot/static system. The unit is mounted behind the instrument panel, just forward of the MFD. An outside air temperature probe, mounted on top of the cabin, is connected to the Air Data Computer. The ADC calculates pressure altitude, airspeed, true airspeed, vertical speed and outside air temperature.

GEA 71 ENGINE MONITOR

The GEA 71 Engine Monitor is responsible for receiving and processing the signals from all of the engine and airframe sensors. It is connected to all of the cylinder head temperature measuring sensors, exhaust gas temperature sensors, RPM, fuel flow and to the fuel gauging system. This unit transmits this information to the GIA 63 computers.

GTX 33 TRANSPONDER

The GTX 33 is a full-featured Mode S transponder which provides Mode A, C and S functions. Control and operation of the transponder is accomplished using the PFD. The GTX 33 unit is mounted in the tailcone avionics racks.

Additional standard avionics supplied for use with the G1000 Integrated Cockpit System include:

(Continued Next Page)

STANDARD AVIONICS (Continued)

GDL 69A XM WEATHER AND RADIO DATA LINK

The GDL 69A XM Weather and Radio Data Link provides weather information and digital audio entertainment in the cockpit. The unit is mounted in the tailcone, behind the baggage curtain. This unit communicates with the MFD on the High-Speed Data Bus. XM Weather and XM Radio operate in the S-band frequency range to provide continuous uplink capabilities at any altitude throughout North America. A subscription to the XM Satellite Radio service is required for the GDL 69A to be used.

BENDIX/KING KAP 140 2 AXIS AUTOPILOT

Refer to Section 9, Supplement 3, for operating information.

WARNING

WHEN THE KAP 140 AUTOPILOT IS ENGAGED IN NAV, APR OR REV OPERATING MODES, IF THE HSI NAVIGATION SOURCE IS CHANGED FROM GPS TO NAV1 AUTOMATICALLY OR MANUALLY (USING THE CDI SOFTKEY) OR MANUALLY FROM NAV2 TO GPS, THE CHANGE WILL INTERRUPT THE NAVIGATION SIGNAL TO THE AUTOPILOT AND WILL CAUSE THE AUTOPILOT TO REVERT TO ROLL MODE OPERATION. NO WARNING CHIME OR PFD ANNUNCIATION IS PROVIDED. THE PREVIOUSLY SELECTED MODE SYMBOL SHOWN ON THE AUTOPILOT DISPLAY WILL BE FLASHING TO SHOW THE REVERSION TO ROLL MODE OPERATION. IN ROLL MODE, THE AUTOPILOT WILL ONLY KEEP THE WINGS LEVEL AND WILL NOT CORRECT THE AIRPLANE HEADING OR COURSE. SET THE HDG BUG TO THE CORRECT HEADING AND SELECT THE CORRECT NAVIGATION SOURCE ON THE HSI USING THE CDI SOFTKEY BEFORE ENGAGING THE AUTOPILOT IN ANY OTHER OPERATING MODE.

AVIONICS SUPPORT EQUIPMENT

Avionics cooling fans, antennas, microphone and headset provisions, power converter and static discharge wicks support the operation of the avionics equipment installations.

AVIONICS COOLING FAN

Four DC electric fans provide forced air and ambient air circulation cooling for the G1000 avionics equipment. A single fan in the tail cone provides forced air cooling to the Integrated Avionics Units and to the Transponder. A fan located forward of the instrument panel removes air from between the firewall bulkhead and instrument panel, directing the warm air up at the inside of the windshield. Two additional fans blow air directly onto the heat sinks located on the forward sides of the PFD and MFD.

Power is provided to these fans when the MASTER (BAT) switch and the AVIONICS (BUS 1 and BUS 2) switch are all ON.

NOTE

None of the cooling fans will operate when the essential bus avionics equipment is being powered by the standby battery.

(Continued Next Page)

AVIONICS SUPPORT EQUIPMENT (Continued)

ANTENNAS

Two combination VHF COM/GPS antennas are mounted on the top of the cabin. COM 1/GPS 1 antenna is mounted on the RH side. COM 2/GPS 2/GDL 69A antenna is mounted on the LH side. They are connected to the two VHF communication transceivers and the two GPS receivers in the GIA 63 Integrated Avionics Units, and the GDL 69A.

A dipole navigation antenna element is mounted on either side of the vertical stabilizer. This antenna provides VOR and glideslope signals to the VHF navigation receivers contained in the GIA 63 Integrated Avionics Units.

The marker beacon antenna is mounted on the bottom of the tailcone. It provides the signal to the marker beacon receiver located in of the GMA 1347 audio panel.

The transponder antenna is mounted on the bottom of the cabin is connected to the GTX 33 Mode S transponder by a coaxial transmission cable.

The DME (if installed) antenna is mounted on the bottom of the tailcone and is connected to the Honeywell KN 63 DME by a coaxial cable.

MICROPHONE AND HEADSET INSTALLATIONS

Standard equipment for the airplane includes a hand-held microphone, an overhead speaker, two remote-keyed microphone switches on the control wheels, and provisions for communications headsets at each pilot and passenger station.

The hand-held microphone includes an integral push-to-talk switch. This microphone is plugged in at the center pedestal and is accessible to both the pilot and front passenger. Pressing the push-to-talk switch allows voice transmission on the COM radios.

The overhead speaker is located in the center overhead console. Volume and output for this speaker is controlled through the audio panel.

(Continued Next Page)

AVIONICS SUPPORT EQUIPMENT (Continued)

MICROPHONE AND HEADSET INSTALLATIONS (Continued)

Each control wheel contains a push-to-talk switch. This switch allows the pilot or front passenger to transmit on the COM radios using remote mics.

Each seat position of the airplane has provisions for aviation-style headsets. Microphone and headphone jacks are located on each respective sidewall panel for communications between passengers and pilot. The system is designed so all microphones are voice-activated. Only the pilot or front passenger can transmit through the COM radios.

NOTE

To ensure audibility and clarity when transmitting with the handheld microphone, always hold it as closely as possible to the lips, then press the transmit switch and speak directly into it. Avoid covering the opening on back side of microphone for optimum noise canceling.

AUXILIARY AUDIO INPUT JACK

An auxiliary audio input jack (AUX AUDIO IN) is located on the center pedestal (refer to Figure 7-2). It allows entertainment audio devices such as cassette players and compact disc players to play music over the aircraft's headsets.

The signal from AUX AUDIO IN is automatically muted during radio communications or pilot selection of crew intercom isolation modes located on the Garmin GMA 1347 audio panel. The AUX key on the GMA 1347 audio panel does not control the AUX AUDIO IN signal. For a more complete description and operating instructions of the audio panel, refer to the Garmin G1000 Cockpit Reference Guide.

(Continued Next Page)

AVIONICS SUPPORT EQUIPMENT (Continued)

AUXILIARY AUDIO INPUT JACK (Continued)

Since the entertainment audio input is not controlled by a switch, there is no way to deselect the entertainment source except to disconnect the source at the audio input connector. In the event of a high pilot workload and/or heavy traffic, it is wise to disable the entertainment audio to eliminate a source of distraction for the flight crew.

NOTE

- Passenger briefing should specify that AUX AUDIO IN (entertainment audio input) and Portable Electronic Device (PED) use is permitted only during the enroute phase of flight.

- Disconnect the cable from the AUX AUDIO IN jack when not in use.

- Use caution with audio cables in the cabin to avoid entangling occupants or cabin furnishings and to prevent damage to cables.

AVIONICS SUPPORT EQUIPMENT (Continued)

12V POWER OUTLET

A power converter located on the cabin side of the firewall, forward of the right instrument panel, reduces the aircraft's 28 VDC power to 12 VDC. This converter provides up to 10 amps of power to operate portable devices such as notebook computers and audio players. The power output connector (POWER OUTLET 12V -10A) is located on the center pedestal (refer to Figure 7-2).

For airplanes 172S10103 and On, a switch located on the switch panel labeled "CABIN PWR 12V" controls the operation of the power outlets.

NOTE

- Charging of lithium batteries may cause the lithium batteries to explode.
- Take care to observe the manufacturer's power requirements prior to plugging any device into the 12 volt Cabin Power System connector. This system is limited to a maximum of 10 amps.
- Use caution with power/adapter cables in the cabin to avoid entangling occupants or cabin furnishings and to prevent damage to cables supplying live electric current.
- Disconnect power/adapter cables when not in use.

STATIC DISCHARGERS

Static wicks (static dischargers) are installed at various points throughout the airframe to reduce interference from precipitation static. Under some severe static conditions, loss of radio signals is possible even with static dischargers installed. Whenever possible, avoid known severe precipitation areas to prevent loss of dependable radio signals. If avoidance is impractical, minimize airspeed and anticipate temporary loss of radio signals while in these areas.

Static dischargers lose their effectiveness with age, and therefore, should be checked periodically (at least at every annual inspection) by a qualified technician.

CABIN FEATURES

EMERGENCY LOCATOR TRANSMITTER (ELT)

A remote switch/annunciator is installed on the top center location of the right front passenger instrument panel for control of the ELT from the flight crew station. The annunciator, which is in the center of the rocker switch, illuminates when the ELT transmitter is transmitting. The ELT emits an omni-directional signal on the international distress frequencies of 121.5 MHz and 243.0 MHz. General aviation and commercial aircraft, the FAA and CAP monitor 121.5 MHz, and 243.0 MHz is monitored by the military. For a basic overview of the ELT, refer to the Section 9, Supplement 1.

CABIN FIRE EXTINGUISHER

A portable Halon 1211 (Bromochlorodifluoromethane) fire extinguisher is installed in a holder on the floorboard between the front seats to be accessible in case of fire. The extinguisher is classified 5B:C by Underwriters Laboratories.

The extinguisher should be checked prior to each flight to ensure that the pressure of the contents, as indicated by the gage at the top of the extinguisher, is within the green arc (approximately 125 psi) and the operating lever lock pin is securely in place.

To operate the fire extinguisher:

1. Loosen retaining clamp(s) and remove extinguisher from bracket.
2. Hold extinguisher upright, pull operating ring pin, and press lever while directing the liquid at the base of the fire at the near edge. Progress toward the back of the fire by moving the nozzle rapidly with a side to side sweeping motion.

WARNING

VENTILATE THE CABIN PROMPTLY AFTER SUCCESSFULLY EXTINGUISHING THE FIRE TO REDUCE THE GASES PRODUCED BY THERMAL DECOMPOSITION.

(Continued Next Page)

CABIN FEATURES (Continued)

CABIN FIRE EXTINGUISHER (Continued)

3. The contents of the cabin fire extinguisher will empty in approximately eight seconds of continuous use.

Fire extinguishers should be recharged by a qualified fire extinguisher agency after each use. Such agencies are listed under "Fire Extinguisher" in the telephone directory. After recharging, secure the extinguisher to its mounting bracket.

CARBON MONOXIDE DETECTION SYSTEM (if installed)

The carbon Monoxide (CO) detection system consist of a single detector located behind the instrument panel, powered by the airplanes DC electrical system and integrated in the Garmin G1000 system with a warning annunciation and alert messages displayed on the PFD.

When the CO detection system senses a CO level of 50 parts per million (PPM) by volume or greater the alarm turns on a flashing warning annunciation CO LVL HIGH, in the annunciation window on the PFD with a continuous tone until the PFD softkey below WARNING is pushed. It then remains on steady until the CO level drops below 50 PPM and automatically resets the alarm.

If the CO system detects a problem within the system that requires service a CO DET SRVC message is displayed in the Alerts window of the PFD. If there is an interface problem between the G1000 system and the CO system a CO DET FAIL message is displayed in the Alerts window of the PFD.

AIRPLANE HANDLING, SERVICE AND MAINTENANCE

TABLE OF CONTENTS

Page

Introduction 8-3
Identification Plate 8-4
Cessna Owner Advisories 8-4
United States Airplane Owners 8-4
International Airplane Owners 8-5
Publications 8-5
Airplane File 8-6
Airplane Inspection Periods 8-7
FAA Required Inspections 8-7
Cessna Inspection Programs 8-8
Cessna Customer Care Program 8-9
Pilot Conducted Preventive Maintenance 8-9
Alterations Or Repairs 8-10
Ground Handling 8-10
Towing 8-10
Parking 8-11
Tie-Down 8-11
Jacking 8-11
Leveling 8-12
Flyable Storage 8-13
Servicing 8-14
Oil 8-15
Oil Specification 8-15
Recommended Viscosity for Temperature Range 8-15
Capacity of Engine Sump 8-16
Oil and Oil Filter Change 8-16

(Continued Next Page)

TABLE OF CONTENTS (Continued)

Page

Fuel 8-17
Approved Fuel Grades (and Colors) 8-17
Fuel Capacity 8-17
Fuel Additives 8-18
Fuel Contamination 8-22
Landing Gear 8-23
Cleaning And Care 8-23
Windshield And Windows 8-23
Painted Surfaces 8-24
Propeller Care 8-25
Engine Care 8-25
Interior Care 8-26
Avionics Care 8-26

INTRODUCTION

This section contains factory recommended procedures for proper ground handling and routine care and servicing of your airplane. It also identifies certain inspection and maintenance requirements which must be followed if your airplane is to retain that new airplane performance and dependability. It is important to follow a planned schedule of lubrication and preventive maintenance based on climatic and flying conditions encountered in your local area.

Keep in touch with your local Cessna Service Station and take advantage of their knowledge and experience. Your Cessna Service Station knows your airplane and how to maintain it, and will remind you when lubrications and oil changes are necessary, as well as other seasonal and periodic services.

The airplane should be regularly inspected and maintained in accordance with information found in the airplane maintenance manual and in company issued Service Bulletins and Service Newsletters. All Service Bulletins pertaining to the airplane by serial number should be accomplished and the airplane should receive repetitive and required inspections. Cessna does not condone modifications, whether by Supplemental Type Certificate or otherwise, unless these certificates are held and/or approved by Cessna. Other modifications may void warranties on the airplane since Cessna has no way of knowing the full effect on the overall airplane. Operation of an airplane that has been modified may be a risk to the occupants, and operating procedures and performance data set forth in the operating handbook may no longer be considered accurate for the modified airplane.

IDENTIFICATION PLATE

All correspondence regarding your airplane should include the Serial Number. The Serial Number, Model Number, Production Certificate Number (PC) and Type Certificate Number (TC) can be found on the Identification Plate, located on the aft left tailcone. The Finish and Trim Plate, located on the lower part of the left forward doorpost, contains a code describing the exterior paint configuration for the airplane. The code may be used in conjunction with an applicable Illustrated Parts Catalog if finish and trim information is needed.

CESSNA OWNER ADVISORIES

Cessna Owner Advisories are sent to Cessna Aircraft FAA Registered owners of record at no charge to inform them about mandatory and/or beneficial airplane service requirements and product changes. Copies of the Service Bulletins are available from Cessna Service Stations and Cessna Customer Service.

UNITED STATES AIRPLANE OWNERS

If your airplane is registered in the U. S., appropriate Cessna Owner Advisories will be mailed to you automatically according to the latest airplane registration name and address which you have provided to the FAA. Therefore, it is important that you provide correct and up-to-date mailing information to the FAA.

If you require a duplicate Owner Advisory to be sent to an address different from the FAA airplane registration address, please complete and return an Owner Advisory Application (otherwise no action is required on your part).

(Continued Next Page)

CESSNA OWNER ADVISORIES (Continued)

INTERNATIONAL AIRPLANE OWNERS

To receive Cessna Owner Advisories, please complete and return an Owner Advisory Application.

Receipt of a valid Owner Advisory Application will establish your Cessna Owner Advisory service for one year, after which you will be sent a renewal notice. It is important that you respond promptly to update your address for this critical service.

PUBLICATIONS

Various publications and flight operation aids are furnished in the airplane when delivered from the factory. These items are listed below.

- Customer Care Program Handbook
- Pilot's Operating Handbook and FAA Approved Airplane Flight Manual
- Pilot's Checklist
- Passenger Briefing Card
- Cessna Service Directory

To obtain additional publications or Owner Advisory information, you may contact Cessna's Propeller Aircraft Product Support Department at (316) 517-5800, Fax (316) 942-9006 or write to Cessna Aircraft Company, P.O. Box 7706, Wichita, KS 67277, Dept 751C.

PUBLICATIONS (Continued)

The following additional publications, plus many other supplies that are applicable to your airplane, are available from a Cessna Service Station.

- Information Manual (contains Pilot's Operating Handbook Information)
- Maintenance Manual, Wiring Diagram Manual and Illustrated Parts Catalog

Cessna Service Stations have a Customer Care Supplies and Publications Catalog covering all available items, many of which the Service Station keeps on hand. The Service Station can place an order for any item which is not in stock.

NOTE

A Pilot's Operating Handbook and FAA Approved Airplane Flight Manual which is lost or destroyed may be replaced by contacting a Cessna Service Station. An affidavit containing the owner's name, airplane serial number and reason for replacement must be included in replacement requests since the Pilot's Operating Handbook and FAA Approved Airplane Flight Manual is identified for specific serial numbered airplanes only.

AIRPLANE FILE

There are miscellaneous data, information and licenses that are a part of the airplane file. The following is a checklist for that file. In addition, a periodic check should be made of the latest Federal Aviation Regulations to ensure that all data requirements are met.

To be displayed in the airplane at all times:

1. Aircraft Airworthiness Certificate (FAA Form 8100-2).
2. Aircraft Registration Certificate (FAA Form 8050-3).
3. Aircraft Radio Station License (if applicable).

(Continued Next Page)

AIRPLANE FILE (Continued)

To be carried in the airplane at all times:

1. Current Pilot's Operating Handbook and FAA Approved Airplane Flight Manual.
2. Garmin G1000 Cockpit Reference Guide (190-00384-00 or subsequent revision).
3. Weight and Balance, and associated papers (latest copy of the Repair and Alteration Form, FAA Form 337, if applicable).
4. Equipment List.

To be made available upon request:

1. Airplane Logbook.
2. Engine Logbook.

Most of the items listed are required by the United States Federal Aviation Regulations. Since the Regulations of other nations may require other documents and data, owners of airplanes not registered in the United States should check with their own aviation officials to determine their individual requirements.

Cessna recommends that these items, plus the Pilot's Checklists, Customer Care Program Handbook and Customer Care Card, be carried in the airplane at all times.

AIRPLANE INSPECTION PERIODS

FAA REQUIRED INSPECTIONS

As required by U.S. Federal Aviation Regulations, all civil aircraft of U.S. registry must undergo a complete inspection (annual) each twelve calendar months. In addition to the required annual inspection, aircraft operated commercially (for hire) must have a complete inspection every 100 hours of operation.

The FAA may require other inspections by the issuance of airworthiness directives applicable to the airplane, engine, propeller and components. It is the responsibility of the owner/operator to ensure compliance with all applicable airworthiness directives, and when the inspections are repetitive, to take appropriate steps to prevent inadvertent noncompliance.

CESSNA INSPECTION PROGRAMS

In lieu of the 100 hour and annual inspection requirements, an airplane may be inspected in accordance with a Progressive Care Inspection Program or a PhaseCard Inspection Program. Both programs offer systems which allow the work load to be divided into smaller operations that can be accomplished in shorter time periods.

The Cessna Progressive Care Inspection Program allows an airplane to be inspected and maintained in four operations. The four operations are recycled each 200 hours and are recorded in a specially provided Aircraft Inspection Log as each operation is conducted.

The PhaseCard Inspection Program offers a parallel system for high-utilization flight operations (approximately 600 flight hours per year). This system utilizes 50 hour intervals (Phase 1 and Phase 2) to inspect high-usage systems and components. At 12 months or 600 flight hours, whichever occurs first, the airplane undergoes a complete (Phase 3) inspection.

Regardless of the inspection method selected, the owner should keep in mind that FAR Part 43 and FAR Part 91 establishes the requirement that properly certified agencies or personnel accomplish all required FAA inspections and most of the manufacturer recommended inspections.

CESSNA CUSTOMER CARE PROGRAM

Specific benefits and provisions of the Cessna Warranty plus other important benefits for you are contained in your Customer Care Program Handbook supplied with your airplane. The Customer Care Program Handbook should be thoroughly reviewed and kept in the airplane at all times.

You will also want to return to your Cessna Service Station either at 50 hours for your first Progressive Care Operation, or at 100 hours for your first 100 hour inspection depending on which program you choose to establish for your airplane. While these important inspections will be performed for you by any Cessna Service Station, in most cases you will prefer to have the Cessna Service Station from whom you purchased the airplane accomplish this work.

PILOT CONDUCTED PREVENTIVE MAINTENANCE

A certified pilot who owns or operates an airplane not used as an air carrier is authorized by FAR Part 43 to perform limited maintenance on his airplane. Refer to FAR Part 43 for a list of the specific maintenance operations which are allowed.

NOTE

Pilots operating airplanes of other than U.S. registry should refer to the regulations of the country of certification for information on preventive maintenance that may be performed by pilots.

A Maintenance Manual must be obtained prior to performing any preventive maintenance to ensure that proper procedures are followed. A Cessna Service Station should be contacted for further information or for required maintenance which must be accomplished by appropriately licensed personnel.

ALTERATIONS OR REPAIRS

It is essential that the FAA be contacted prior to any alterations on the airplane to ensure that airworthiness of the airplane is not violated. Alterations or repairs to the airplane must be accomplished by licensed personnel, utilizing only FAA Approved components and FAA Approved data, such as Cessna Service Bulletins.

GROUND HANDLING

TOWING

The airplane is most easily and safely maneuvered by hand with the tow bar attached to the nose wheel (the tow bar is stowed on the side of the baggage area). When towing with a vehicle, do not exceed the nose gear turning angle of 30° either side of center, or damage to the nose landing gear will result.

CAUTION

REMOVE ANY INSTALLED RUDDER LOCK BEFORE TOWING.

If the airplane is towed or pushed over a rough surface during hangaring, watch that the normal cushioning action of the nose strut does not cause excessive vertical movement of the tail and the resulting contact with low hangar doors or structure. A flat nose tire or deflated strut will also increase tail height.

(Continued Next Page)

GROUND HANDLING (Continued)

PARKING

When parking the airplane, head into the wind and set the parking brake. Do not set the parking brake during cold weather when accumulated moisture may freeze the brakes, or when the brakes are overheated. Install the control wheel lock and chock the wheels. In severe weather and high wind conditions, tie the airplane down as outlined in the following paragraph.

TIE-DOWN

Proper tie-down procedure is the best precaution against damage to the parked airplane by gusty or strong winds. To tie-down the airplane securely, proceed as follows:

1. Set the parking brake and install the control wheel lock.
2. Install a surface control lock over the fin and rudder.
3. Tie sufficiently strong ropes or chains (700 pounds tensile strength) to the wing, tail and nose tie-down fittings and secure each rope or chain to a ramp tie-down.
4. Install a pitot tube cover.

JACKING

When a requirement exists to jack the entire airplane off the ground, or when wing jack points are used in the jacking operation, refer to the Maintenance Manual for specific procedures and equipment required.

Individual main gear may be jacked by using the jack pad which is incorporated in the main landing gear strut step bracket. When using the individual gear strut jack pad, flexibility of the gear strut will cause the main wheel to slide inboard as the wheel is raised, tilting the jack. The jack must then be lowered for a second jacking operation. Do not jack both main wheels simultaneously using the individual main gear jack pads.

(Continued Next Page)

GROUND HANDLING (Continued)

JACKING (Continued)

CAUTION

DO NOT APPLY PRESSURE ON THE ELEVATOR OR HORIZONTAL STABILIZER SURFACES. WHEN PUSHING ON THE TAILCONE, ALWAYS APPLY PRESSURE AT A BULKHEAD TO AVOID BUCKLING THE SKIN.

If nose gear maintenance is required, the nose wheel may be raised off the ground by pressing down on a tailcone bulkhead, just forward of the horizontal stabilizer, and allowing the tail to rest on the tail tie-down ring.

To assist in raising and holding the nose wheel off the ground, ground anchors should be utilized at the tail tie down point.

NOTE

Ensure that the nose will be held off the ground under all conditions by means of suitable stands or supports under weight supporting bulkheads near the nose of the airplane.

LEVELING

Longitudinal leveling of the airplane is accomplished by placing a level on leveling screws located on the left side of the tailcone. Deflate the nose tire and/or lower or raise the nose strut to properly center the bubble in the level. Corresponding points on both upper door sills may be used to level the airplane laterally.

(Continued Next Page)

GROUND HANDLING (Continued)

FLYABLE STORAGE

Engines in airplanes that are flown every 30 days or less may not achieve normal service life because of internal corrosion. Corrosion occurs when moisture from the air and the products of combustion combine to attack cylinder walls and bearing surfaces during periods when the airplane is not flown.

The minimum recommended operating frequency for the engine is one continuous flight hour (not counting taxi, takeoff and landing time) with oil temperatures of 165°F to 200°F every 30 days or less (depending on location and storage conditions). Airplanes operated close to oceans, lakes, rivers and in humid regions are in greater need of engine preservation than airplanes operated in arid regions. Appropriate engine preservation procedures must be practiced by the owner or operator of the airplane based on present environmental conditions and the frequency of airplane activity.

NOTE

The engine manufacturer does not recommend pulling the engine through by hand during storage periods.

If the airplane is to remain inactive for more than 30 days, consult the latest revision of Textron Lycoming Service Letter L180 (www.lycoming.textron.com).

It is recommended when storing the airplane for any period of time to keep fuel tanks full to minimize condensation in tanks. Keep the battery fully charged to prevent the electrolyte from freezing in cold weather. Refer to the Maintenance Manual for proper airplane storage procedures.

SERVICING

In addition to the Preflight Inspection covered in Section 4 of this handbook, complete servicing, inspection and test requirements for your airplane are detailed in the Maintenance Manual. The Maintenance Manual outlines all items which require attention at specific intervals plus those items which require servicing, inspection, and/or testing at special intervals.

Since Cessna Service Stations conduct all service, inspection, and test procedures in accordance with applicable Maintenance Manuals, it is recommended that you contact your local Cessna Service Station concerning these requirements and begin scheduling your airplane for service at the recommended intervals.

Cessna Progressive Care ensures that these requirements are accomplished at the required intervals to comply with the 100 hour or annual inspection as previously covered.

Depending on various flight operations, your local Government Aviation Agency may require additional service, inspections, or tests. For these regulatory requirements, owners should check with local aviation officials where the airplane is being operated.

For quick and ready reference, quantities, materials and specifications for frequently used service items are as follows.

OIL

OIL SPECIFICATION

MIL-L-6082 or SAE J1966 Aviation Grade Straight Mineral Oil: Used when the airplane was delivered from the factory and should be used to replenish the supply during the first 25 hours. This oil should be drained and filter replaced after the first 25 hours of operation. Refill the engine and continue to use until a total of 50 hours has accumulated or oil consumption has stabilized.

MIL-L-22851 or SAE J1899 Aviation Grade Ashless Dispersant Oil: Oil conforming to Textron Lycoming Service Instruction No. 1014, and all revision and supplements thereto, must be used after first 50 hours, or when oil consumption has stabilized.

RECOMMENDED VISCOSITY FOR TEMPERATURE RANGE

Multiviscosity or straight grade oil may be used throughout the year for engine lubrication. Refer to the following table for temperature verses viscosity range

Temperature	MIL-L-6082 or SAE J1966 Straight Mineral Oil SAE Grade	MIL-L-22851 or SAE J1899 Ashless Dispersant SAE Grade
Above 27°C (80°F)	60	60
Above 16°C (60°F)	50	40 or 50
-1°C (30°F) to 32°C (90°F)	40	40
-18°C (0°F) to 21°C (70°F)	30	30, 40 or 20W-40
Below -12°C (10°F)	20	30 or 20W-30
-18°C (0°F) to 32°C (90°F)	20W-50	20W-50 or 15W-50
All Temperatures	---	15W-50 or 20W-50

(Continued Next Page)

OIL (Continued)

CAPACITY OF ENGINE SUMP

The engine lubrication system has a total capacity of 9 quarts of oil, with the oil filter accounting for 1 quart of that total. The engine oil sump (crankcase) has a capacity of 8 quarts. The engine must not be operated with less than 5 quarts in the sump. For extended flights, the engine oil level should be at 8 quarts.

OIL AND OIL FILTER CHANGE

After the first 25 hours of operation, drain the engine oil sump and replace the filter. Refill sump with straight mineral oil and use until a total of 50 hours has accumulated or oil consumption has stabilized; then change to ashless dispersant oil. Ashless dispersant oil (and oil filter) should then be changed at time intervals set forth by the engine manufacturer.

NOTE

During the first 25 hour oil and filter change, a general inspection of the overall engine compartment is required. Items which are not normally checked during a preflight inspection should be given special attention. Hoses, metal lines and fittings should be inspected for signs of oil and fuel leaks, and checked for abrasions, chafing, security, proper routing and support, and evidence of deterioration. Inspect the intake and exhaust systems for cracks, evidence of leakage, and security of attachment. Engine controls and linkages should be checked for freedom of movement through their full range, security of attachment and evidence of wear. Inspect wiring for security, chafing, burning, defective insulation, loose or broken terminals, heat deterioration, and corroded terminals. Check the alternator belt in accordance with Maintenance Manual instructions, and tighten if necessary. A periodic check of these items during subsequent servicing operations is recommended.

FUEL

APPROVED FUEL GRADES (AND COLORS)

100LL Grade Aviation Fuel (Blue).
100 Grade Aviation Fuel (Green).

NOTE

Isopropyl alcohol or diethylene glycol monomethyl ether (DiEGME) may be added to the fuel supply in quantities not to exceed 1% (alcohol) or 0.15% (DiEGME) of total volume. Refer to Fuel Additives in later paragraphs for additional information.

FUEL CAPACITY

56.0 U.S. Gallons Total: 28.0 U.S. Gallons per tank.

NOTE

To ensure maximum fuel capacity when refueling and minimize cross feeding, the fuel selector valve should be placed in either the LEFT or RIGHT position and the airplane parked in a wings level, normal ground attitude. Refer to Figure 1-1 for a definition of normal ground attitude.

Service the fuel system after each flight, and keep fuel tanks full to minimize condensation in the tanks.

(Continued Next Page)

FUEL (Continued)

FUEL ADDITIVES

Strict adherence to recommended preflight draining instructions as called for in Section 4 will eliminate any free water accumulations from the tank sumps. While small amounts of water may still remain in solution in the gasoline, it will normally be consumed and go unnoticed in the operation of the engine.

One exception to this can be encountered when operating under the combined effect of: (1) use of certain fuels, with (2) high humidity conditions on the ground (3) followed by flight at high altitude and low temperature. Under these unusual conditions, small amounts of water in solution can precipitate from the fuel stream and freeze in sufficient quantities to induce partial icing of the engine fuel system.

While these conditions are quite rare and will not normally pose a problem to owners and operators, they do exist in certain areas of the world and consequently must be dealt with, when encountered.

To help decrease the possibility of fuel icing occurring under these unusual conditions, it is permissible to add isopropyl alcohol or diethylene glycol monomethyl ether (DiEGME) compound to the fuel supply.

Alcohol or DiEGME compound added to the fuel absorbs the dissolved water from the gasoline. Alcohol has a freezing temperature depressant effect.

NOTE

When using fuel additives, it must be remembered that the final goal is to obtain a correct fuel-to-additive ratio in the tank, and not just with fuel coming out of the refueling nozzle. For example, adding 15 gallons of correctly proportioned fuel to a tank which contains 20 gallons of untreated fuel will result in a lower-than-acceptable concentration level to the 35 gallons of fuel which now reside in the tank.

(Continued Next Page)

FUEL (Continued)

FUEL ADDITIVES (Continued)

Alcohol must be blended with the fuel in a concentration of 1% by volume. Concentrations greater than 1% are not recommended since they can be detrimental to fuel tank materials.

Alcohol is most effective when it is completely dissolved in the fuel. To ensure proper mixing, the following is recommended:

1. For best results, the alcohol should be added during the fueling operation by pouring the alcohol directly on the fuel stream issuing from the fueling nozzle.

2. An alternate method that may be used is to premix the complete alcohol dosage with some fuel in a separate clean container (approximately 2-3 gallon capacity) and then transferring this mixture to the tank prior to the fuel operation.

Diethylene glycol monomethyl ether (DiEGME) compound must be carefully mixed with the fuel in concentrations between 0.10% (minimum) and 0 .15% (maximum) of total fuel volume. Refer to Figure 8-1 for a DiEGME-to-fuel mixing chart.

WARNING

ANTI-ICING ADDITIVE IS DANGEROUS TO HEALTH WHEN BREATHED AND/OR ABSORBED INTO THE SKIN.

(Continued Next Page)

FUEL (Continued)

FUEL ADDITIVES (Continued)

CAUTION

MIXING OF DIEGME WITH FUEL IS EXTREMELY IMPORTANT. A CONCENTRATION IN EXCESS OF THAT RECOMMENDED (0.15% BY VOLUME MAXIMUM) MAY RESULT IN DETRIMENTAL EFFECTS TO THE FUEL TANK SEALANT, AND DAMAGE TO O-RINGS AND SEALS USED IN THE FUEL SYSTEM AND ENGINE COMPONENTS. A CONCENTRATION OF LESS THAN THAT RECOMMENDED (0.10% BY TOTAL VOLUME MINIMUM) WILL RESULT IN INEFFECTIVE TREATMENT. USE ONLY BLENDING EQUIPMENT THAT IS RECOMMENDED BY THE MANUFACTURER TO OBTAIN PROPER PROPORTIONING.

Prolonged storage of the airplane will result in a water buildup in the fuel which precipitates the additive. An indication of this is when an excessive amount of water accumulates in the fuel tank sumps. The concentration can be checked using a differential refractometer. It is imperative that the technical manual for the differential refractometer be followed explicitly when checking the additive concentration.

(Continued Next Page)

FUEL MIXING RATIO

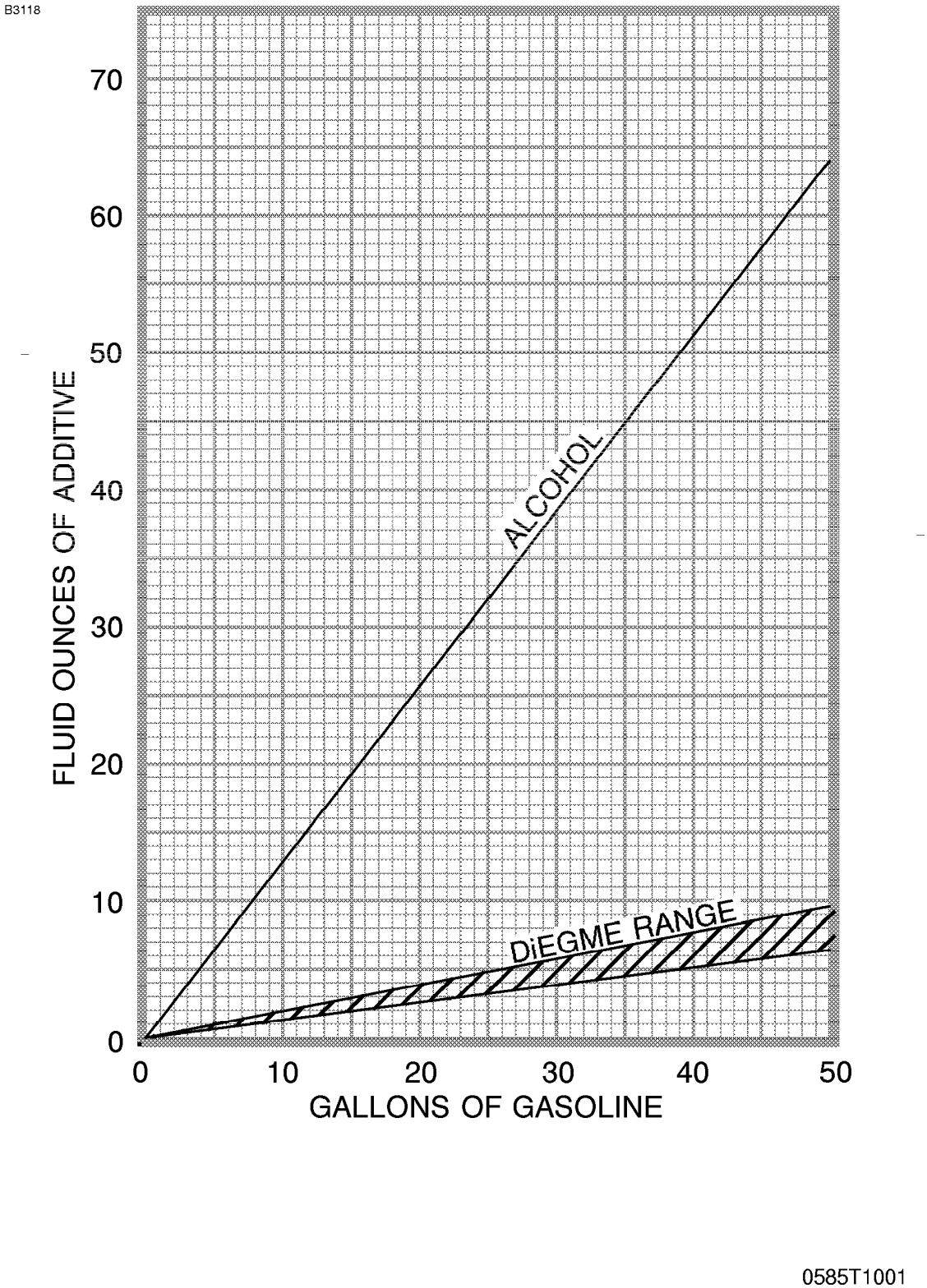

Figure 8-1. Fuel Mixing Ratio

FUEL (Continued)

FUEL CONTAMINATION

Fuel contamination is usually the result of foreign material present in the fuel system, and may consist of water, rust, sand, dirt, microbes or bacterial growth. In addition, additives that are not compatible with fuel or fuel system components can cause the fuel to become contaminated.

Before each flight and after each refueling, use a clear sampler cup and drain at least a cupful of fuel from each fuel tank drain location and from the fuel strainer quick drain valve to determine if contaminants are present, and to ensure the airplane has been fueled with the proper grade of fuel.

If contamination is detected, drain **all** fuel drain points including the fuel reservoir and fuel selector quick drain valves and then gently rock the wings and lower the tail to the ground to move any additional contaminants to the sampling points. Take repeated samples from all fuel drain points until **all** contamination has been removed. If, after repeated sampling, evidence of contamination still exists, the airplane should not be flown. Tanks should be drained and system purged by qualified maintenance personnel. All evidence of contamination must be removed before further flight. If the airplane has been serviced with the improper fuel grade, defuel completely and refuel with the correct grade. Do not fly the airplane with contaminated or unapproved fuel.

In addition, Owners/Operators who are not acquainted with a particular fixed base operator should be assured that the fuel supply has been checked for contamination and is properly filtered before allowing the airplane to be serviced. Fuel tanks should be kept full between flights, provided weight and balance considerations will permit, to reduce the possibility of water condensing on the walls of partially filled tanks.

To further reduce the possibility of contaminated fuel, routine maintenance of the fuel system should be performed in accordance with the airplane Maintenance Manual. Only the proper fuel, as recommended in this handbook, should be used, and fuel additives should not be used unless approved by Cessna and the Federal Aviation Administration.

LANDING GEAR

Consult the following table for servicing information on the landing gear.

COMPONENT	SERVICING CRITERIA
Nose Gear Tire (5.00-5, 6-Ply Rated Tire)	45.0 PSI
Main Gear Tire (6.00-6, 6-Ply Rated Tire)	42.0 PSI
Brakes	MIL-H-5606
Nose Gear Shock Strut	MIL-H-5606; 45.0 PSI *

* Keep strut filled with MIL-H-5606 hydraulic fluid per filling instructions placard, and with no load on the strut, inflate with air to 45.0 PSI. Do not over inflate.

CLEANING AND CARE

WINDSHIELD AND WINDOWS

The plastic windshield and windows should be cleaned with an aircraft windshield cleaner. Apply the cleaner sparingly with soft cloths, and rub with moderate pressure until all dirt, oil scum and bug stains are removed. Allow the cleaner to dry, then wipe it off with soft flannel cloths.

CAUTION

NEVER USE GASOLINE, BENZENE, ALCOHOL, ACETONE, FIRE EXTINGUISHER, ANTI-ICE FLUID, LACQUER THINNER OR GLASS CLEANER TO CLEAN THE PLASTIC. THESE MATERIALS WILL ATTACK THE PLASTIC AND MAY CAUSE IT TO CRAZE.

If a windshield cleaner is not available, the plastic can be cleaned with soft cloths moistened with Stoddard solvent to remove oil and grease.

CLEANING AND CARE (Continued)

Follow by carefully washing with a mild detergent and plenty of water. Rinse thoroughly, then dry with a clean moist chamois. Do not rub the plastic with a dry cloth since this builds up an electrostatic charge which attracts dust. Waxing with a good commercial wax will finish the cleaning job. A thin, even coat of wax, polished out by hand with clean soft flannel cloths, will fill in minor scratches and help prevent further scratching.

Do not use a canvas cover on the windshield unless freezing rain or sleet is anticipated since the cover may scratch the plastic surface.

PAINTED SURFACES

The painted exterior surfaces of your new Cessna have a durable, long lasting finish.

Generally, the painted surfaces can be kept bright by washing with water and mild soap, followed by a rinse with water and drying with cloths or a chamois. Harsh or abrasive soaps or detergents which cause corrosion or scratches should never be used. Remove stubborn oil and grease with a cloth moistened with Stoddard solvent. Take special care to make sure that the exterior graphics are not touched by the solvent. For complete care of exterior graphics refer to the Maintenance Manual.

To seal any minor surface chips or scratches and protect against corrosion, the airplane should be waxed regularly with a good automotive wax applied in accordance with the manufacturer's instructions. If the airplane is operated in a seacoast or other salt water environment, it must be washed and waxed more frequently to assure adequate protection. Special care should be taken to seal around rivet heads and skin laps, which are the areas most susceptible to corrosion. A heavier coating of wax on the leading edges of the wings and tail and on the cowl nose cap and propeller spinner will help reduce the abrasion encountered in these areas. Reapplication of wax will generally be necessary after cleaning with soap solution or after chemical deicing operations.

CLEANING AND CARE (Continued)

PAINTED SURFACES (Continued)

When the airplane is parked outside in cold climates and it is necessary to remove ice before flight, care should be taken to protect the painted surfaces during ice removal with chemical liquids. Isopropyl alcohol will satisfactorily remove ice accumulations without damaging the paint. However, keep the isopropyl alcohol away from the windshield and cabin windows since it will attack the plastic and may cause it to craze.

PROPELLER CARE

Preflight inspection of propeller blades for nicks, and wiping them occasionally with an oily cloth to clean off grass and bug stains will assure long blade life. Small nicks on the propeller, particularly near the tips and on the leading edges, should be dressed out as soon as possible since these nicks produce stress concentrations, and if ignored, may result in cracks or failure of the propeller blade. Never use an alkaline cleaner on the blades; remove grease and dirt with Stoddard solvent.

ENGINE CARE

The engine may be cleaned, using a suitable solvent, in accordance with instructions in the airplane Maintenance Manual. Most efficient cleaning is done using a spray type cleaner. Before spray cleaning, ensure that protection is afforded for components which might be adversely affected by the solvent. Refer to the Maintenance Manual for proper lubrication of controls and components after engine cleaning. The induction air filter should be replaced when its condition warrants, not to exceed 500 hours.

(Continued Next Page)

CLEANING AND CARE (Continued)

INTERIOR CARE

To remove dust and loose dirt from the upholstery and carpet, clean the interior regularly with a vacuum cleaner.

Blot up any spilled liquid promptly with cleansing tissue or rags. Do not pat the spot; press the blotting material firmly and hold it for several seconds. Continue blotting until no more liquid is taken up. Scrape off sticky materials with a dull knife, then spot clean the area.

Oily spots may be cleaned with household spot removers, used sparingly. Before using any solvent, read the instructions on the container and test it on an obscure place on the fabric to be cleaned. Never saturate the fabric with a volatile solvent; it may damage the padding and backing materials.

Soiled upholstery and carpet may be cleaned with foam type detergent, used according to the manufacturer's instructions. To minimize wetting the fabric, keep the foam as dry as possible and remove it with a vacuum cleaner.

For complete information related to interior cleaning, refer to the Maintenance Manual.

AVIONICS CARE

The Garmin GDU 1040 displays have an anti-reflective coating that is very sensitive to skin oils, waxes, ammonia, and abrasive cleaners. Clean the displays as described in the G1000 Cockpit Reference Guide.

SUPPLEMENTS

INTRODUCTION

The supplements in this section contain expanded operational procedures for both standard and optional equipment installed in the airplane. Operators should refer to each supplement to ensure that all limitations and procedures appropriate for their airplane are observed.

A Log Of Approved Supplements is provided, for convenience only, beginning on page Log 1 is a numerical list of all supplements applicable to this airplane by name, number and revision level. This log should be used as a checklist to ensure all applicable supplements have been placed in the Pilot's Operating Handbook (POH). Supplements may be removed from the POH provided the equipment is not installed on the airplane. If equipment is installed on the airplane the supplement(s) must be retained and updated as revisions to each supplement are issued.

Each individual supplement contains its own Log of Effective Pages. This log lists the page number and revision level of every page in the supplement. The log also lists the dates on which revisions to the supplement occurred. Additionally, the part number of the supplement provides information on the revision level. Refer to the following example:

B4000

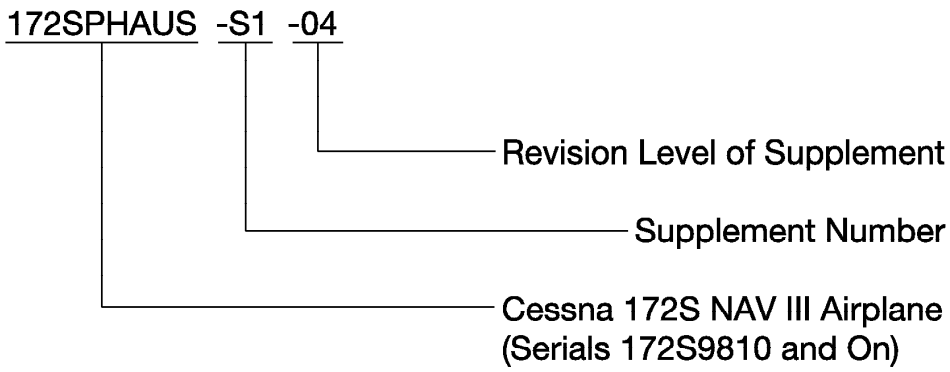

LOG OF APPROVED SUPPLEMENTS

NOTE

IT IS THE AIRPLANE OWNER'S RESPONSIBILITY TO MAKE SURE THAT HE OR SHE HAS THE LATEST REVISION TO EACH SUPPLEMENT OF A PILOT'S OPERATING HANDBOOK, AND THE LATEST ISSUED "LOG OF APPROVED SUPPLEMENTS". THIS "LOG OF APPROVED SUPPLEMENTS" WAS THE LATEST VERSION AS OF THE DATE IT WAS SHIPPED BY CESSNA; HOWEVER, SOME CHANGES MAY HAVE OCCURRED, AND THE OWNER SHOULD VERIFY THIS IS THE LATEST, MOST UP-TO-DATE VERSION BY CONTACTING CESSNA CUSTOMER SUPPORT AT (316) 517-5800.

Supplement Number	Name	Revision Level	Equipment Installed
1	Pointer Model 3000-11 or Model 4000-11 Emergency Locator Transmitter (ELT)	1	
2	Canadian Supplement	0	
3	Bendix/King KAP 140 2 Axis Autopilot	0	
4	Winterization Kit	0	
5	Brazilian Certified Airplanes	1	
6	Artex C406-N Emergency Locator Transmitter (ELT)	1	
7	Bendix/King KR87 Automatic Direction Finder (ADF)	0	
8	Russian Federation (RF) and Other Commonwealth of Independent States (CIS) Countries	0	
9	Artex ME406 Emergency Locator Transmitter (ELT)	0	
10	JAR-OPS Operational Eligibility	0	

Cessna
A Textron Company

Pilot's Operating Handbook and FAA Approved Airplane Flight Manual

CESSNA MODEL 172S

NAV III AVIONICS OPTION

Serials 172S9810 and On

SUPPLEMENT 1

POINTER MODEL 3000-11 OR MODEL 4000-11 EMERGENCY LOCATOR TRANSMITTER

SERIAL NO. _____
REGISTRATION NO._____

This supplement must be inserted into Section 9 of the Pilot's Operating Handbook and FAA Approved Airplane Flight Manual when the Pointer Model 3000-11 or Model 4000-11 Emergency Locator Transmitter is installed. The Pointer Model 4000-11 Emergency Locator Transmitter is approved for use only in the USA, Canada, Japan and France.

APPROVED BY

FAA APPROVED UNDER 14 CFR PART 21 SUBPART J
Cessna Aircraft Co.
Delebation Option Authorization DOA-230694-CE

Member of GAMA

DATE OF APPROVAL 02-25-05

25 FEBRUARY 2005

REVISION 1 19 SEPTEMBER 2005

COPYRIGHT © 2005
CESSNA AIRCRAFT COMPANY
WICHITA, KANSAS, USA

SUPPLEMENT 1

POINTER MODEL 3000-11 OR MODEL 4000-11 EMERGENCY LOCATOR TRANSMITTER (ELT)

Use the Log of Effective Pages to determine the current status of this supplement.

Pages affected by the current revision are indicated by an asterisk (*) preceding the page number.

Supplement Status	**Date**
Original Issue	25 February 2005
Revised	19 September 2005

LOG OF EFFECTIVE PAGES

	Page Number	Page Status	Revision Number
*	S1-1 thru S1-2	Revised	1
	S1-3	Original	0
*	S1-4	Revised	1
	S1-5 thru S1-12	Original	0

APPROVED BY

FAA APPROVED UNDER 14 CFR PART 21 SUBPART J
Cessna Aircraft Co.
Delegation Option Authorization DOA-230694-CE

DOA Administrator

DATE OF APPROVAL 09-19-05

SERVICE BULLETIN CONFIGURATION LIST

The following is a list of Service Bulletins that are applicable to the operation of the airplane, and have been incorporated into this supplement. This list contains only those Service Bulletins that are currently active.

Number	Title	Airplane Serial Effectivity	Revision Incorporated	Incorporated in Airplane

POINTER MODEL 3000-11 OR 4000-11 EMERGENCY LOCATOR TRANSMITTER (ELT)

GENERAL

This supplement provides information which must be observed when operating the Pointer Model 3000-11 or 4000-11 Emergency Locator Transmitter. The Pointer Model 4000-11 Emergency Locator Transmitter is approved for use only in the USA, Canada, Japan and France.

Both the Pointer Model 3000-11 ELT (which incorporates the English placard) and Model 4000-11 ELT (which incorporates the bilingual placard) consist of a self-contained, dual-frequency, solid-state transmitter powered by a battery pack consisting of five alkaline "C" cell batteries and is automatically activated by a deceleration sensing inertia "G" switch, which is designed to activate when the unit senses longitudinal inertia forces as required in TSO-C91A. Also, a remote switch/annunciator is installed on the top right hand side of the copilot's instrument panel for control of the ELT from the flight crew station. The annunciator, which is in the center of the rocker switch, comes on when the ELT transmitter is transmitting. The ELT emits an omni-directional signal on the international distress frequencies of 121.5 MHz and 243.0 MHz. General aviation and commercial aircraft, the FAA and CAP monitor 121.5 MHz, and 243.0 MHz is monitored by the military.

The ELT is contained in a high impact, fire retardant, fiberglass filled Lexan case with carrying handle and is mounted behind the aft cabin partition wall on the right side of the tailcone. To gain access to the unit, unfasten the turn fasteners on the aft cabin partition. The ELT is operated by a control panel at the forward facing end of the unit or by the remote switch/annunciator located on the top right hand portion of the copilot's instrument panel (refer to Figure S1-1).

Power for the transmitter is provided by an alkaline battery pack inside the transmitter case.

(Continued Next Page)

GENERAL (CONTINUED)

In accordance with FAA regulations, the ELT's battery pack must be replaced after 2 years shelf or service life or for any of the following reasons:

a. After the transmitter has been used in an emergency situation (including any inadvertent activation of unknown duration).
b. After the transmitter has been operated for more than one cumulative hour (e.g. time accumulated in several tests and inadvertent activation of known duration).
c. On or before battery replacement date. Battery replacement date is marked on the battery pack and the label on the transmitter.

POINTER MODEL 3000-11 EMERGENCY LOCATOR TRANSMITTER

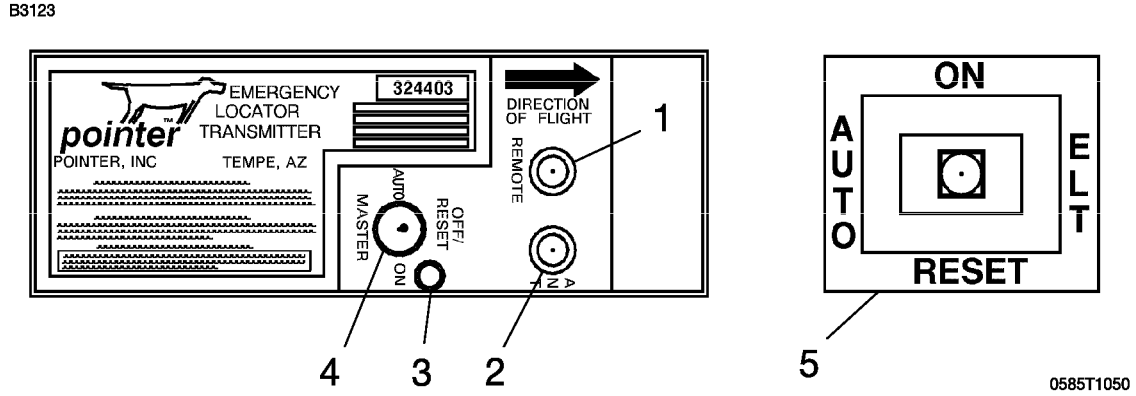

Figure S1-1

1. REMOTE CABLE JACK - Connects to ELT remote switch/ annunciator located on the copilot's instrument panel.
2. ANTENNA RECEPTACLE - Connects to antenna mounted on top of tailcone.
3. TRANSMITTER ANNUNCIATOR LIGHT - comes on red to indicate the transmitter is transmitting a distress signal.

(Continued Next Page)

GENERAL (CONTINUED)

4. MASTER FUNCTION SELECTOR SWITCH (3-position toggle switch):

   AUTO - Arms transmitter for automatic activation if "G" switch senses a predetermined deceleration level.

   ON - Activates transmitter instantly. Used for test purposes and if "G" switch is inoperative. The ON position bypasses the automatic activation switch. (The red annunciator in the center of the remote switch/ annunciator should come on).

   OFF/ RESET - Deactivates transmitter during handling, following rescue and to reset the automatic activation function. (The red annunciator in the center of the remote switch/annunciator should go off).

5. REMOTE SWITCH/ANNUNCIATOR (3-position rocker switch):

   ON - Remotely activates the transmitter for test or emergency situations. Red annunciator in center of rocker switch comes on to indicate that the transmitter is transmitting a distress signal.

   AUTO - Arms transmitter for automatic activation if "G" switch senses a predetermined deceleration level.

   RESET - Deactivates and rearms transmitter after automatic activation by the "G" switch. Red annunciator in center of rocker switch should go off.

(Continued Next Page)

GENERAL (CONTINUED)

POINTER MODEL 4000-11
EMERGENCY LOCATOR TRANSMITTER

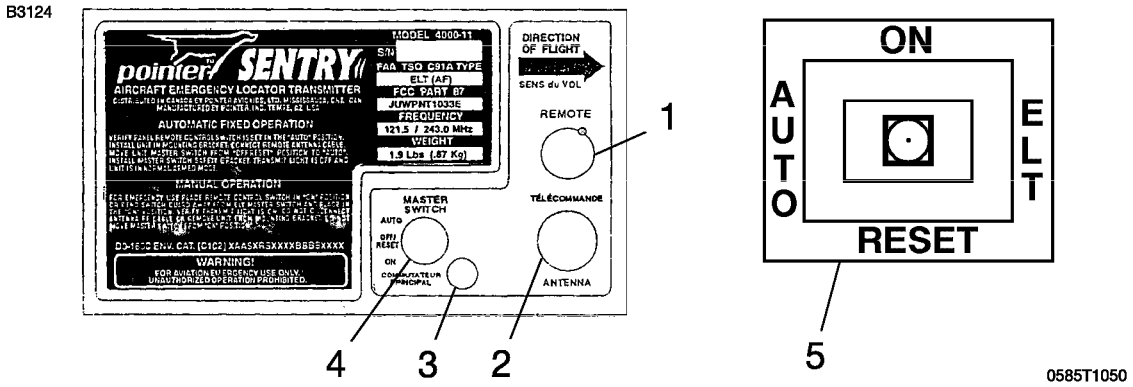

Figure S1-2

1. REMOTE CABLE JACK - Connects to ELT remote switch/ annunciator located on the copilot's instrument panel.
2. ANTENNA RECEPTACLE - Connects to antenna mounted on top of tailcone.
3. TRANSMITTER ANNUNCIATOR LIGHT - comes on red to indicate the transmitter is transmitting a distress signal.
4. MASTER FUNCTION SELECTOR SWITCH (3-position toggle switch):

AUTO - Arms transmitter for automatic activation if "G" switch senses a predetermined deceleration level.

ON - Activates transmitter instantly. Used for test purposes and if "G" switch is inoperative. The ON position bypasses the automatic activation switch. (The red annunciator in the center of the remote switch/ annunciator should come on).

OFF/ RESET - Deactivates transmitter during handling, following rescue and to reset the automatic activation function. (The red annunciator in the center of the remote switch/annunciator should go off).

(Continued Next Page)

GENERAL (CONTINUED)

5. REMOTE SWITCH/ANNUNCIATOR (3-position rocker switch):

ON - Remotely activates the transmitter for test or emergency situations. Red annunciator in center of rocker switch comes on to indicate that the transmitter is transmitting a distress signal.

AUTO - Arms transmitter for automatic activation if "G" switch senses a predetermined deceleration level.

RESET - Deactivates and rearms transmitter after automatic activation by the "G" switch. Red annunciator in center of rocker switch should go off.

OPERATING LIMITATIONS

Refer to Section 2 of the Pilot's Operating Handbook and FAA Approved Flight Manual (POH/AFM).

EMERGENCY PROCEDURES

Before performing a forced landing, especially in remote and mountainous areas, activate the ELT transmitter by positioning the remote switch/annunciator to the ON position. The annunciator in center of the rocker switch should be illuminated.

Immediately after a forced landing where emergency assistance is required, the ELT should be utilized as follows:

NOTE

The ELT remote switch/annunciator system could be inoperative if damaged during a forced landing. If inoperative, the inertia "G" switch will activate automatically. However, to turn the ELT OFF and ON again requires manual switching of the master function selector switch which is located on the ELT unit.

(Continued Next Page)

EMERGENCY PROCEDURES (CONTINUED)

1. VERIFY ELT ACTIVATION:
   a. Position remote switch/annunciator to the ON position even if annunciator light is already on.
   b. If airplane radio is operable and can be safely used (no threat of fire or explosion), turn ON and select 121.5 MHz. If the ELT can be heard transmitting, it is working properly.
   c. Ensure that antenna is clear of obstructions.

NOTE

When the ELT is activated, a decreasing tone will be heard before the typical warbling tone begins.

2. PRIOR TO SIGHTING RESCUE AIRCRAFT - Conserve airplane battery. Do not activate radio transceiver.
3. AFTER SIGHTING RESCUE AIRCRAFT - Position remote switch/annunciator to the RESET position and release to the AUTO position to prevent radio interference. Attempt contact with rescue aircraft with the radio transceiver set to a frequency of 121.5 MHz. If no contact is established, return the remote switch/annunciator to the ON position immediately.
4. FOLLOWING RESCUE - Position remote switch/annunciator to the AUTO position, terminating emergency transmissions.

NORMAL PROCEDURES

When the remote switch/annunciator is in the AUTO position and the ELT master function selector switch remains in the AUTO position, the ELT automatically activates when the unit senses longitudinal inertia forces as required in TSO-C91A.

After a lightning strike, or an exceptionally hard landing, the ELT may activate although no emergency exists. If the remote switch/annunciator comes on, the ELT has inadvertently activated itself. Another way to check is to select 121.5 MHz on the radio transceiver and listen for an emergency tone transmission. If the remote switch/annunciator is on or an emergency tone is heard, position the remote switch/annunciator in the RESET position and release to the AUTO position.

The ELT must be serviced in accordance with FAR Part 91.207.

INSPECTION/TEST

1. The emergency locator transmitter should be tested every 100 hours.

NOTE

Test should only be conducted within the first 5 minutes of each hour.

2. Disconnect antenna cable from ELT.
3. Set the MASTER switch BAT in the ON position.
4. Turn airplane transceiver ON and set frequency to 121.5 MHz.
5. Place remote switch/annunciator in the ON position. The annunciator should come on. Permit **only three** emergency tone transmissions, then immediately reposition the remote switch/annunciator to the RESET position and release to the AUTO position.

(Continued Next Page)

NORMAL PROCEDURES (CONTINUED)

6. Place the ELT master function selector switch in the ON position. Verify that the transmitter annunciator light on the ELT and the remote switch/annunciator on the instrument panel are on.
7. Place the ELT master function selector switch in the OFF/RESET position.
8. Reposition ELT master function selector switch to AUTO.
9. Reconnect antenna cable to ELT.

WARNING

A TEST WITH THE ANTENNA CONNECTED SHOULD BE APPROVED AND CONFIRMED BY THE NEAREST CONTROL TOWER.

NOTE

Without its antenna connected, the ELT will produce sufficient signal to reach the airplane transceiver, yet it will not disturb other communications or damage output circuitry.

After accumulated test or operation time equals 1 hour, battery pack replacement is required.

IN-FLIGHT MONITORING AND REPORTING

Pilot's are encouraged to monitor 121.5 MHz and/or 243.0 MHz while in flight to assist in identifying possible emergency ELT transmissions. On receiving a signal, report the following information to the nearest air traffic control facility:

1. Your position at the time the signal was first heard.
2. Your position at the time the signal was last heard.
3. Your position at maximum signal strength.
4. Your flight altitude and frequency on which the emergency signal was heard - 121.5 MHz or 243.0 MHz. If possible, positions should be given relative to a navigation aid. If the aircraft has homing equipment, provide the bearing to the emergency signal with each reported position.

PERFORMANCE

There is no change in airplane performance when the Pointer Model 3000-11 or 4000-11 Emergency Locator Transmitter (ELT) is installed.

Cessna
A Textron Company

Pilot's Operating Handbook
and
FAA Approved Airplane Flight Manual

CESSNA MODEL 172S
NAV III AIRPLANES

Serials 172S9810 and On

SUPPLEMENT 2

CANADIAN SUPPLEMENT

SERIAL NO._____
REGISTRATION NO._____

This supplement must be inserted into Section 9 of the Pilot's Operating Handbook and FAA Approved Airplane Flight Manual when used for Canadian Operation.

Member of GAMA

APPROVED BY

FAA APPROVED UNDER 14 CFR PART 21 SUBPART J
Cessna Aircraft Co.
Delegation Option Authorization DOA-[illegible]-CE

DATE OF APPROVAL 02-25-05

COPYRIGHT © 2005
CESSNA AIRCRAFT COMPANY
WICHITA, KANSAS, USA

172SPHAUS-S2-00

25 FEBRUARY 2005

SUPPLEMENT 2

CANADIAN SUPPLEMENT

Use the Log of Effective Pages to determine the current status of this supplement.

Pages affected by the current revision are indicated by an asterisk (*****) preceding the page number.

Supplement Status	Date
Original Issue	25 February 2005

LOG OF EFFECTIVE PAGES

Page Number	Page Status	Revision Number
S2-1 thru S2-4	Original	0

SERVICE BULLETIN CONFIGURATION LIST

The following is a list of Service Bulletins that are applicable to the operation of the airplane, and have been incorporated into this supplement. This list contains only those Service Bulletins that are currently active.

Number	Title	Airplane Serial Effectivity	Revision Incorporated	Incorporated in Airplane

CANADIAN SUPPLEMENT

GENERAL

This supplement is required for Canadian operation of Cessna Model 172S With Nav III Avionics option Serials 172S9810 and On.

NOTE

In Canada, FAA operating rules (i.e., FAR 91 and FAR 135) are not applicable. The airplane must be equipped and operated in accordance with Transport Canada.

OPERATING LIMITATIONS

The following placard must be installed.

1. Near the fuel tank filler cap:

FUEL
100LL/100 MIN. GRADE AVIATION GASOLINE
CAP. 26.5 U.S. GAL. (100 LITERS) USABLE
CAP. 17.5 U.S. GAL. (66 LITERS) USABLE TO BOTTOM OF FILLER INDICATOR TAB.

EMERGENCY PROCEDURES

There is no change to the airplane emergency procedures when used for Canadian operation.

NORMAL PROCEDURES

There is no change to the airplane normal procedures when used for Canadian operation.

PERFORMANCE

There is no change to the airplane performance when used for Canadian operation.

Cessna
A Textron Company

Pilot's Operating Handbook
and
FAA Approved Airplane Flight Manual

CESSNA MODEL 172S
NAV III AIRPLANES

Serials 172S9810 and On

SUPPLEMENT 3
BENDIX/KING KAP 140 2 AXIS AUTOPILOT

SERIAL NO._____
REGISTRATION NO._____

This supplement must be inserted into Section 9 of the Pilot's Operating Handbook and FAA Approved Airplane Flight Manual when the KAP 140 2 Axis Autopilot System is installed.

Member of GAMA

APPROVED BY

FAA APPROVED UNDER 14 CFR PART 21 SUBPART J
Cessna Aircraft Co.
Delegation Option Authorization [illegible]

DATE OF APPROVAL 02-25-05

25 FEBRUARY 2005

COPYRIGHT © 2005
CESSNA AIRCRAFT COMPANY
WICHITA, KANSAS, USA

SUPPLEMENT 3

BENDIX/KING KAP 140 2 AXIS AUTOPILOT

Use the Log of Effective Pages to determine the current status of this supplement.

Pages affected by the current revision are indicated by an asterisk (*****) preceding the page number.

Supplement Status	Date
Original	25 February 2005

LOG OF EFFECTIVE PAGES

Page Number	Page Status	Revision Number
S3-1 thru S3-44	Original	0

SERVICE BULLETIN CONFIGURATION LIST

The following is a list of Service Bulletins that are applicable to the operation of the airplane, and have been incorporated into this supplement. This list contains only those Service Bulletins that are currently active.

Number	Title	Airplane Serial Effectivity	Revision Incorporated	Incorporated in Airplane

BENDIX/KING KAP 140 2 AXIS AUTOPILOT

GENERAL

The Bendix/King KAP 140 2-Axis Autopilot provides the following modes of operation:

1. Roll (ROL) mode - keeps the wings level,

2. Vertical Speed (VS) mode - holds the climb or descent rate at the moment the autopilot is engaged or a manually-set climb or descent rate. Controlled using the UP and DN buttons.

NOTE

The autopilot can hold a set vertical speed only if engine power and airplane weight will let it. If the vertical speed set on the autopilot is more than the airplane can supply and airspeed decreases sufficiently, the airplane can be made to stall. Make sure that the vertical speed set on the autopilot results in airplane performance that stays in the operating limitations of both the autopilot and the airplane.

3. Altitude Hold (ALT) mode - holds a set altitude using combined engine power, pitch and pitch trim control.

4. Heading (HDG) mode - holds the magnetic heading set using the HDG bug on the G1000 Primary Flight Display (PFD) HSI.

5. Navigation (NAV) mode - locks on a course set using the CRS knob when a valid VHF navigation source (NAV 1 or NAV 2) is shown on the G1000 HSI, when GPS is set as the HSI navigation source and the GPS is operating in OBS mode, or when the course is set automatically using GPS direct-to or flight plan (FPL) navigation and GPS is shown on the G1000 HSI.

(Continued Next Page)

GENERAL (Continued)

6. Approach (APR) mode - locks on-course with greater sensitivity than NAV mode. APR mode is used to lock on the final approach course (to the Final Approach Fix) to start the final approach segment of the procedure. While operating on an intercept heading or course in either HDG or NAV mode, APR mode is set or "armed" (ARM) to lock on to the final approach course. APR mode will work for VOR, LOC and ILS approaches using either the NAV 1 or NAV 2 VHF navigation radios with the correct signal, the applicable radio set as the navigation source on the HSI and the correct course (CRS) set on the HSI. APR mode will automatically lock on the glideslope (GS) using vertical speed mode during ILS approaches. APR supplies vertical guidance only for ILS approaches, and then only when established on the localizer before glideslope intercept. This mode also works for GPS or RNAV/GPS approaches when GPS is set as the navigation source on the HSI.

The KAP 140 Autopilot gives the pilot Altitude Preselect and Altitude Alert functions. The Altitude Preselect function lets the pilot set a limit or "target" altitude before starting a climb or descent. The KAP 140 will climb or descend, as applicable, at the set vertical speed and will return to level flight at the altitude selection. The autopilot will supply an Altitude Alert (an electronic sound or "tone") at 1000 feet before the altitude selection or when altitude changes more than 200 feet from the altitude selection.

The KAP 140 Autopilot Elevator Trim System supplies automatic adjustment of elevator trim during autopilot operation and, when the autopilot is not engaged, gives the pilot a manual electric elevator trim (MET) function (using the DN-UP Switches on the Control Wheel). The Elevator Trim system is designed to fail to a safe condition (fail-safe) for any single trim system malfunction during flight. Trim system malfunctions produce warning annunciations on the face of the autopilot and on the G1000 PFD.

(Continued Next Page)

GENERAL (Continued)

A locking device prevents the autopilot or MET from engaging until the autopilot computer has completed the preflight self-test sequence and finds that the system is not defective. The preflight self-test starts when the AVIONICS BUS 2 Switch is set to the ON position.

The KAP 140 Autopilot will disengage if any of the following conditions occur:

1. Internal Autopilot System malfunction.

2. Autopilot Computer Monitor detects either R (roll axis) or P (pitch axis) malfunction annunciation.

3. Pitch accelerations larger than + 1.4g or - 0.6g caused by a servo malfunction. The pilot cannot maneuver the airplane and cause the autopilot to disengage, although some turbulence can.

4. DC Electric Turn Coordinator malfunction.

5. The A/P DISC/TRIM INT Switch on the LH Control Wheel is pushed.

The AVIONICS BUS 2 Switch supplies electrical power to the AUTO PILOT Circuit Breaker from AVN BUS 2. The AVIONICS BUS 2 Switch can also de-energize the Autopilot or MET system in an emergency.

(Continued Next Page)

GENERAL (Continued)

The following circuit breakers energize and supply protection for the KAP 140 Autopilot:

LABEL	FUNCTIONS
AUTO PILOT	A pull-to-open type circuit breaker on AVN BUS 2 that energizes the KAP 140 Autopilot computer and the roll, pitch and pitch trim servos.
WARN	A pull-to-open type circuit breaker on the X-FEED BUS that supplies power for the PITCH TRIM annunciation on the G1000 PFD.

(Continued Next Page)

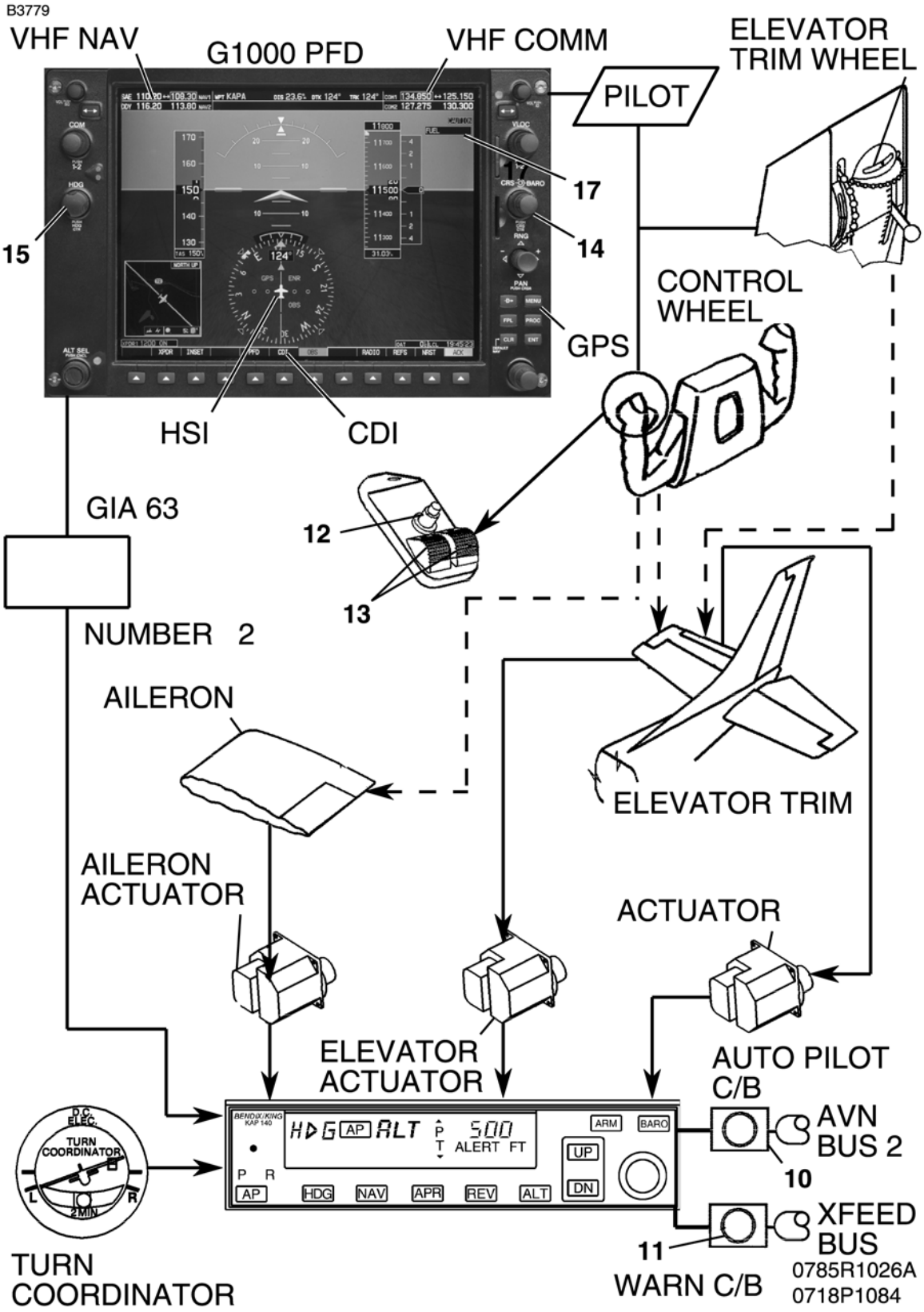
B3779
VHF NAV
G1000 PFD
VHF COMM
ELEVATOR TRIM WHEEL
PILOT
17
15
14
CONTROL WHEEL
GPS
HSI
CDI
GIA 63
12
13
NUMBER 2
AILERON
ELEVATOR TRIM
AILERON ACTUATOR
ACTUATOR
ELEVATOR ACTUATOR
AUTO PILOT C/B
AVN BUS 2
10
XFEED BUS
11
WARN C/B
TURN COORDINATOR
0785R1026A
0718P1084

Figure S3-1

GENERAL (Continued)

BENDIX/KING KAP 140 2 AXIS AUTOPILOT WITH ALTITUDE PRESELECT, OPERATING CONTROLS AND INDICATORS

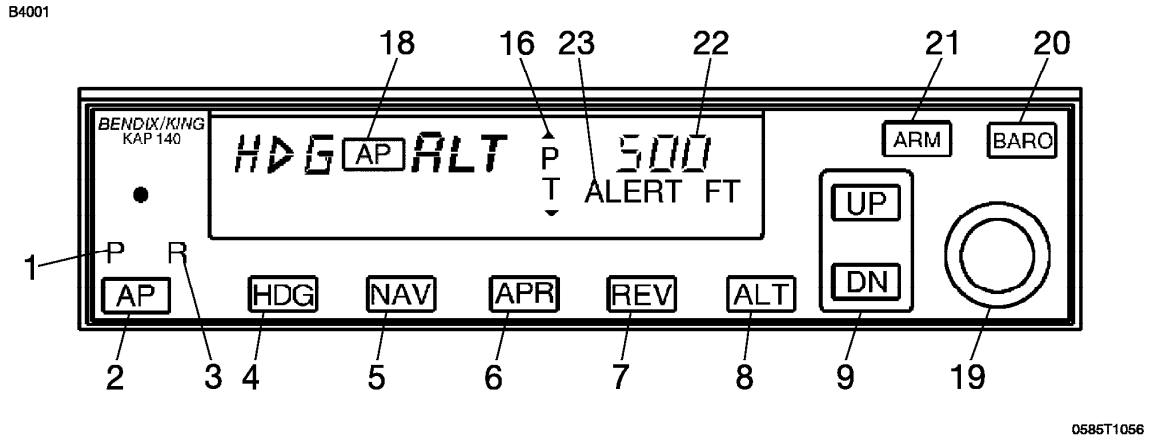

Figure S3-2

KAP 140 WITH ALTITUDE PRESELECT

1. PITCH AXIS (P) ANNUNCIATOR - When illuminated, indicates failure of pitch axis and will either disengage the autopilot or not allow engagement of the pitch axis. In turbulent air, will illuminate during abnormal vertical/accelerations.
2. AUTOPILOT ENGAGE/DISENGAGE (AP) BUTTON - When pressed and held (approx. 0.25 seconds), engages autopilot if all preflight self-test conditions are met. The autopilot will engage in the basic roll (ROL) mode which functions as a wing leveler and the pitch axis vertical speed (VS) mode. The commanded vertical speed will be displayed in the upper right corner of autopilot display area. The captured VS will be the vertical speed present at the moment the AP button is pressed. The button may also be used to disengage the autopilot.
3. ROLL AXIS (R) ANNUNCIATOR - When illuminated, indicates failure of the roll axis and disengages the autopilot.

(Continued Next Page)

GENERAL (Continued)

4. HEADING (HDG) MODE SELECTOR BUTTON - When pushed, will select the Heading mode, which commands the airplane to turn to and maintain the heading selected by the heading bug on the HSI. A new heading may be selected at any time and will result in the airplane turning to the new heading. The button can also be used to change between HDG and ROL modes.
5. NAVIGATION (NAV) MODE SELECTOR BUTTON - When pushed, will select the Navigation mode. This mode provides automatic beam capture and tracking of VOR, LOC, or GPS signals as set on the HSI. NAV mode is recommended for enroute navigation tracking.
6. APPROACH (APR) MODE SELECTOR BUTTON - When pushed, will select the Approach mode. This mode provides automatic beam capture and tracking of VOR, GPS, LOC and Glideslope (GS) on an ILS, as set on the HSI. APR mode tracking sensitivity is recommended for instrument approaches.
7. BACK COURSE APPROACH (REV) MODE BUTTON - This button is active only when the coupled navigation receiver is tuned to a LOC/ILS frequency. When pushed will select the Back Course approach mode. This mode functions identically to the approach mode except that the autopilot response to LOC signals is reversed. Glideslope is locked out with REV mode.
8. ALTITUDE HOLD (ALT) MODE SELECT BUTTON - When pushed, will select the altitude hold mode. This mode provides capture and tracking of the selected altitude. The selected altitude is the airplane altitude at the moment the ALT button is pressed. If the ALT button is pressed with an established VS rate present, there will be about a 10% (of VS rate) overshoot. The airplane will return positively to the selected altitude.

(Continued Next Page)

GENERAL (Continued)

9. VERTICAL SPEED (UP/DN) MODE BUTTONS - The action of these buttons depends on the vertical mode selection when pressed. If VS mode is active (AP plus any lateral mode) and the UP button is pressed, the autopilot will modify the displayed VS command (FPM) in the up direction. Single momentary cycles on either the UP or DN button will increment the VS command by 100 FPM per cycle. When either button is continuously held in, it will modify the vertical speed command by 300 fpm per second.

   If ALT mode is active, pressing the UP/DN buttons will modify the captured altitude by 20 feet per cycle, or if held continuously will command the airplane up or down at the rate of 500 FPM, synchronizing the ALT reference to the actual airplane altitude upon button release.

10. AUTO PILOT CIRCUIT BREAKER - A 5-amp pull-off circuit breaker supplies 28 VDC to the KAP 140 system.

11. WARN C/B - Power to the autopilot disconnect horn and the annunciator (PITCH TRIM).

12. AUTOPILOT DISCONNECT (A/P DISC/TRIM INT) SWITCH - When depressed will disengage the autopilot and interrupt manual electric trim (MET) power. An autopilot disconnect will be annunciated by a continuous 2 second tone accompanied by flashing "AP" annunciations on the autopilot computer display.

13. MANUAL ELECTRIC TRIM (MET) SWITCHES - When both switches are pressed in the same direction, the trim system will provide pitch trim in the selected direction. Use of manual electric trim during autopilot operation will disengage the autopilot.

(Continued Next Page)

GENERAL (Continued)

14. COURSE SELECT (CRS) KNOB - Selects the desired magnetic course to be tracked by the autopilot. (Note: The HDG bug must also be positioned to the proper course to capture and track the selected radial or desired track).

15. HEADING SELECT KNOB (HDG) - Positions the heading pointer ("bug") on the HSI compass card. Note that the position of the heading bug also provides heading datum to the autopilot when armed for course capture is in NAV, APR, or REV (BC) modes. This is in addition to its use in the HDG mode.

16. PITCH TRIM (PT) Annunciator - Indicates the direction of pitch trim motion. The annunciation will flash if auto trim has not satisfied the request for trim for a period of 10 seconds. A solid **P T** without an arrowhead is an indication of a pitch trim fault. Refer to the EMERGENCY PROCEDURES for proper response to a pitch trim fault.

17. PITCH TRIM Annunciation - Displayed in the PFD, Illuminates whenever the automated preflight self test detects a pitch trim fault or the continuous monitoring system detects a pitch trim fault in flight. Refer to the EMERGENCY PROCEDURES for proper response to a pitch trim fault.

18. AUTOPILOT ENGAGE **AP** Annunciation - Comes on whenever the autopilot is engaged. Flashes during pilot initiated or automatic disengagement.

(Continued Next Page)

GENERAL (Continued)

19. ROTARY KNOBS - Used to set the altitude alerter reference altitude; or may be used immediately after pressing the BARO button, to adjust the autopilot baro setting to match that of the airplane's altimeter when manual adjustment is required.

20. BARO SET (**BARO**) BUTTON - When pushed and released, will change the display from the altitude alerter selected altitude to the baro setting display (either in. HG or HPA) for 3 seconds. If pushed and held for 2 seconds, will change the baro setting display from in HG to HPA or vice versa. Once the baro setting display is visible the rotary knobs may be used to adjust the baro setting.

21. ALTITUDE ARM (**ARM**) BUTTON - When pushed, will change the altitude arming function between on or off. When ALT ARM is annunciated, the autopilot will capture the altitude alerter displayed altitude (provided the airplane is climbing or descending in VS to the displayed altitude). ALT hold arming when the autopilot is engaged is automatic upon altitude alerter altitude selection via the rotary knobs. Note that the alerter functions are independent of the arming process thus providing full time alerting, even when the autopilot is disengaged.

22. ALTITUDE ALERTER/VERTICAL SPEED/BARO SETTING DISPLAY - Normally displays the altitude alerter selected altitude. If the UP or DN button is pushed while in VS hold, the display changes to the command reference for the VS mode in FPM for 3 seconds. If the BARO button is pushed, the display changes to the autopilot baro setting in either in HG or HPA for 3 seconds.

(Continued Next Page)

GENERAL (Continued)

23. ALTITUDE ALERT (**ALERT**) ANNUNCIATION - Illuminates continuously in the region of 200 to 1000 feet from the selected altitude if the airplane was previously outside of this region. Flashes (1) for two seconds the first time the airplane crossed the selected altitude and (2) continuously in the 200 to 1000 feet region if the airplane was previously inside of this region (i.e. at the selected altitude). Associated with the visual alerting is an aural alert (5 short tones) which occurs 1000 feet from the selected altitude upon approaching the altitude and 200 feet from the selected altitude on leaving the altitude.

OPERATING LIMITATIONS

The following autopilot limitations must be obeyed:

1. The entire Preflight procedure given in the Normal Procedures section of this Supplement must be satisfactorily completed prior to each flight. Use of the autopilot or manual electric trim system is prohibited before the satisfactory completion of the Preflight procedure.

2. The autopilot must be OFF during takeoff and landing.

3. During autopilot operation, a pilot must be seated in the left front seat with their seat belt fastened.

4. The system is approved for Category I operation only (Approach mode selected).

5. Autopilot maximum airspeed limitation - 140 KIAS.
   Autopilot minimum airspeed limitation - 70 KIAS.
   Autopilot minimum approach airspeed - 80 KIAS

(Continued Next Page)

OPERATING LIMITATIONS (Continued)

6. Maximum flap extension - 10°.

7. Maximum lateral fuel imbalance with autopilot engaged - 90 lbs.

8. The autopilot must be disengaged below 200 feet AGL during approach operations and below 800 feet AGL for all other phases of flight.

9. Manually overriding the autopilot to change pitch or roll attitude is prohibited. (Disengage the autopilot before moving the control wheel manually).

10. If the red "PITCH TRIM" warning annunciator (shown on the PFD) comes on during flight, do the Recovery Procedure shown in Emergency Procedures. The electric trim and autopilot systems will be de-energized when the AUTO PILOT circuit breaker is open.

11. Operation of the KAP 140 Autopilot is prohibited when the GMA 1347 Audio Panel is inoperative (no warning tone will be supplied when the Autopilot disengages).

EMERGENCY PROCEDURES

The four-step recovery procedure (steps 1 thru 4) listed below should be committed to memory. It is important that the pilot be proficient in accomplishing all four steps without reference to this manual.

RECOVERY PROCEDURE

1. In case of Autopilot, Autopilot Trim, or Manual Electric Trim malfunction (accomplish Items a and b simultaneously):
   a. Airplane Control Wheel - **GRASP FIRMLY** and regain control of airplane.
   b. **A/P DISC/TRIM INT** Switch - **PUSH** and **HOLD** throughout recovery.

(Continued Next Page)

EMERGENCY PROCEDURES (Continued)

c. AIRPLANE - **TRIM** manually as needed.
d. AUTO PILOT Circuit Breaker - **OPEN** (pull out).

WARNING

FOLLOWING AN AUTOPILOT, AUTOTRIM OR MANUAL ELECTRIC TRIM SYSTEM MALFUNCTION, DO NOT ENGAGE THE AUTOPILOT UNTIL THE CAUSE OF THE MALFUNCTION HAS BEEN CORRECTED.

NOTE

The AVIONICS BUS 2 switch may be used to de-energize the autopilot and electric trim systems. If necessary, do steps a. thru c. above, set the AVIONICS BUS 2 switch to the OFF position then locate and open (pull) the AUTO PILOT circuit breaker. Then the AVIONICS BUS 2 switch can be set to the ON position to restore power to the other avionics equipment on AVN BUS 2. Primary attitude, airspeed, directional compass, and altitude instruments will continue to operate when the AVIONICS BUS 2 switch is OFF.

Maximum Altitude losses due to autopilot malfunction:

CONFIGURATION	ALTITUDE LOSS (feet)
Cruise, Climb or Descent	350 feet
Maneuvering	100 feet
Approach	90 feet

AMPLIFIED EMERGENCY PROCEDURES

The following paragraphs provide additional information for more complete understanding of the recommended course(s) of action in emergency situations.

(Continued Next Page)

EMERGENCY PROCEDURES (Continued)

1. An autopilot or autotrim malfunction occurs when there is an uncommanded deviation in the airplane flight path or when there is abnormal control wheel or trim wheel motion. In some cases, (especially for autopilot trim), there may be little to no airplane motion, but the PITCH TRIM annunciator (RH side of PDF) may come on.

2. The primary concern in reacting to an autopilot or autopilot trim system malfunction, or to an automatic disconnect of the autopilot, is to keep control of the airplane. Immediately grasp the control wheel and push and hold the A/P DISC/TRIM INT switch throughout the recovery. Manipulate the controls as required to safely keep the airplane within all of its operating limitations. Elevator trim should be used manually as needed to relieve control forces. Locate and open (pull) the AUTO PILOT circuit breaker on the lower right hand corner of the circuit breaker panel to completely disable the autopilot system.

3. A manual electric trim system malfunction (without pilot actuation of the manual electric trim switches) may be recognized by the PITCH TRIM annunciator coming on or by unusual trim wheel motions with the autopilot not engaged. As with an autopilot malfunction, the first concern following a manual electric trim system malfunction is to keep the airplane in control. Grasp the control wheel firmly and push and hold down the A/P DISC/TRIM INT switch. Locate and pull the AUTO PILOT circuit breaker on the lower right hand corner of the circuit breaker panel (AVN BUS 2).

Trim system voice messages will be provided for the following flight conditions:

1. "TRIM IN MOTION" - Elevator trim runs for more than 5 seconds, message repeats every 5 seconds.

(Continued Next Page)

EMERGENCY PROCEDURES (Continued)

2. CHECK PITCH TRIM - An out of trim condition has existed for approximately 20 seconds, take immediate corrective action:
   a. Airplane Control Wheel - GRASP FIRMLY and keep airplane in control.
   b. A/P DISC/TRIM INT Switch - PUSH and HOLD throughout recovery.
   c. AIRPLANE - RETRIM manually as needed.
   d. AUTO PILOT Circuit Breaker - OPEN (PULL).

NOTE

Emergency Procedures for any malfunction are essentially the same: immediately grasp the control wheel and regain airplane control while pushing and holding the A/P DISC/TRIM INT switch, then trim the airplane as needed. After these steps have been accomplished, secure the autopilot electric trim system by pulling the AUTO PILOT circuit breaker. As with any airplane emergency procedure, it is important that the 4 steps of the Recovery Procedure be committed to memory.

3. The AVIONICS BUS 2 switch may be used to remove all electric power from the autopilot and electric trim systems while the AUTO PILOT circuit breaker is located and opened. When the AVIONICS BUS 2 switch is OFF, the autopilot and electric trim systems will not operate. After opening the AUTO PILOT circuit breaker, set the AVIONICS BUS 2 switch to the ON position to return power to the other equipment on AVN BUS 2.

4. It is important that all portions of the autopilot and electric trim system are tested prior to each flight in accordance with the procedures published herein in order to assure their integrity and continued safe operation during flight.

(Continued Next Page)

EMERGENCY PROCEDURES (Continued)

WARNING

FOLLOWING AN AUTOPILOT, AUTOTRIM OR MANUAL ELECTRIC TRIM SYSTEM MALFUNCTION, DO NOT ENGAGE THE AUTOPILOT UNTIL THE CAUSE OF THE MALFUNCTION HAS BEEN CORRECTED.

A flashing auto trim annunciation on the face of the autopilot indicates a failure in the pitch trim system. The pitch trim (autotrim) system has not reduced the load on the pitch servo sufficiently quickly. This condition should be temporary.

1. FLASHING $\frac{P}{T}$ ANNUNCIATION - OBSERVE airplane pitch behavior. If pitch behavior is satisfactory, wait 5 to 10 seconds for the annunciation to go off.

2. If $\frac{P}{T}$ annunciation continues, CONTROL WHEEL - GRASP FIRMLY, DISENGAGE the autopilot and CHECK for out of trim condition in pitch. Manually trim to reduce control forces.

3. AUTOPILOT OPERATION - CONTINUE, if satisfied that the pitch trim malfunction indication was temporary. DISCONTINUE if failure of autotrim.

If a red **P** or **R** is shown on the face of the autopilot:

1. A red **P** indicates that the pitch axis system of the autopilot has been disabled and cannot be engaged.

WARNING

DO NOT ENGAGE THE AUTOPILOT IF ONLY THE ROLL AXIS IS OPERATING.

(Continued Next Page)

EMERGENCY PROCEDURES (Continued)

NOTE

If the red **P** lamp comes on because of abnormal acceleration of the airplane (due to turbulence), the lamp should go off within approximately one minute and normal operation of the autopilot will begin again.

2. A red **R** means that the autopilot roll axis system has been disabled and cannot be engaged. The autopilot cannot be engaged again.

If a flashing mode annunciation is shown on the face of the autopilot:

1. HDG flashing - Shows a failed heading input. PUSH the HDG button to change to ROL mode. ROL will be shown on the face of the autopilot.

2. NAV, APR or REV flashing - Shows that the autopilot navigation source is not working correctly (flag). The navigation signal may have been lost or the navigation source may have been switched at the PFD.

NOTE

NAV, APR or REV flashing can also be caused by a failed heading input (during course capture).

3. GS flashing - Shows a failed glideslope signal or input (GS will ARM again if a good glideslope signal comes back).

NOTE

- If the approach is continued using the localizer only, make sure to obey the minimum descent altitude (MDA) for the non-precision approach procedure. Use ALT or VS mode as necessary to control altitude.

(Continued Next Page)

EMERGENCY PROCEDURES (Continued)

- When the mode annunciator starts to flash, the autopilot has changed to a default mode of operation: ROL for lateral control and/or VS for vertical control. The autopilot may be engaged in the previous mode again as soon as the correct navigation, glideslope or heading signal or source is available.

- The HDG annunciation will flash for 5 seconds on the selection of NAV, APR or REV mode to tell the pilot to set the HDG bug (HSI) to the desired course.

Effects of equipment failure on autopilot operation:

1. Failure of Attitude Indicator - No effect on autopilot.

2. Failure of AHRS - The autopilot will function only in ROL mode.

3. Failure of DC Turn Coordinator - Autopilot will disengage or will not engage.

4. Failure of HSI - If HSI fails to function correctly, no heading signal will be available, so the autopilot HDG, NAV, APR and REV modes will not function correctly. Only ROL mode will function correctly.

5. Failure of the Transponder Pressure Altitude Encoder - The Altitude Alert and Altitude Preselect functions will not operate correctly (gray code signal not available).

6. Failure of the No. 2 GIA 63 Integrated Avionics Unit: If the No. 2 GIA 63 unit fails, the autopilot will function only in ROL mode.

7. Failure of the GMA 1347 Audio Panel - No aural annunciator (Electronic sound or tone) will be heard when the autopilot disengages.

(Continued Next Page)

NORMAL PROCEDURES

PREFLIGHT (PERFORM BEFORE EACH FLIGHT):

1. MASTER Switch (BAT) - ON.

2. AVIONICS Switch BUS 2 - ON.

3. POWER APPLICATION and SELF-TEST - The autopilot tests itself when power is first made available. The test is a sequence of internal checks before starting normal system operation. The test sequence is shown on the face of the autopilot as "PFT X". "X" is the test sequence step number. Successful completion of the self-test is shown by all autopilot display elements coming on (Display Test), the PITCH TRIM annunciator on the PFD coming on and the operation of the autopilot disengagement tone.

WARNING

IF THE RED P STAYS ON, THE AUTOPILOT HAS FAILED THE PREFLIGHT TEST. OPEN (PULL) THE AUTO PILOT CIRCUIT BREAKER TO MAKE SURE THAT THE AUTOPILOT AND MANUAL ELECTRIC TRIM SYSTEM WILL NOT OPERATE.

NOTE

When power is first supplied to the autopilot, the red P (pitch trim) lamp on the face of the autopilot may come on to show that the pitch system cannot be engaged. This condition should last approximately 30 seconds. The P will go off and the autopilot pitch trim system will function correctly.

(Continued Next Page)

NORMAL PROCEDURES (Continued)

4. MANUAL ELECTRIC TRIM (MET) SYSTEM - TEST (Using the DN - UP Switches on the outboard side of the LH control wheel):

   a. LH Switch - PUSH FORWARD to DN position and hold. MONITOR elevator trim wheel for movement. If elevator trim wheel moves, MET system has failed. Release switch to center OFF position.

NOTE

Any movement of the elevator trim wheel during the check of either the LH or RH Switch means that the Manual Electric Trim System has failed. The airplane may be flown if the AUTO PILOT Circuit Breaker is secured in the open position so that the autopilot is disconnected from electrical power and will not operate until it is repaired.

   b. LH SWITCH - PULL AFT to UP position and hold. Make sure that the elevator trim wheel does not move. Release switch to center OFF position.

   c. RH Switch - PUSH FORWARD to DN position and hold. Make sure that the elevator trim wheel does not move. Make sure the red **P T** light on the face of autopilot comes on. Release switch to center OFF position.

NOTE

If red **P T** light is not shown on the face of the autopilot after the RH Switch is held in the DN position for 5 seconds, the Trim Monitor System has failed. The airplane may be flown if the AUTO PILOT Circuit Breaker is secured in the open position so the autopilot is disconnected from electrical power and will not operate until until it is repaired.

(Continued Next Page)

NORMAL PROCEDURES (Continued)

d. RH SWITCH - PULL AFT to UP position and hold. Make sure that the elevator trim wheel does not move. Make sure the red P/T light on the face of the autopilot comes on. Release switch to center OFF position.

e. LH and RH Switch - PUSH BOTH FORWARD (DN position) at same time and hold. Make sure that the elevator trim wheel moves in the nose-down direction. While holding both LH and RH Switches forward, PUSH and HOLD the A/P DISC/TRIM INT Switch, make sure that the elevator trim wheel does not move while the A/P DISC/TRIM INT Switch is held. Continue to hold the LH and RH Switches forward and RELEASE the A/P DISC/TRIM INT Switch. Make sure that the elevator trim wheel moves in nose-down direction. Release the LH and RH Switches to the center OFF position.

NOTE

Make sure that the elevator Trim Tab moves up with nose down elevator trim (LH & RH Switches held in the DN position) movement. If the elevator trim wheel moves while the A/P DISC/TRIM INT Switch is pushed and held, the Manual Electric Trim System has failed. The airplane may be flown if the AUTO PILOT Circuit Breaker is secured in the open position so that the autopilot is disconnected from electrical power and will not operate until it is repaired.

f. LH and RH Switch - PUSH BOTH AFT (UP position) at same time and hold. Make sure that the elevator trim wheel moves in the nose-up direction. While holding both LH and RH Switches in the aft position , PUSH and HOLD the A/P DISC/TRIM INT Switch, make sure that the elevator trim wheel does not move while the A/P DISC/TRIM INT Switch is held. Continue to hold the LH and RH Switches aft and RELEASE the A/P DISC/TRIM INT Switch. Make sure that the elevator trim wheel moves in nose-up direction. Release the LH and RH Switches to the center OFF position.

(Continued Next Page)

NORMAL PROCEDURES (Continued)

NOTE

Make sure that the elevator Trim Tab moves down with nose up elevator trim (LH & RH Switches held in the UP position) movement. If the elevator trim wheel moves while the A/P DISC/TRIM INT Switch is pushed and held, the Manual Electric Trim System has failed. The airplane may be flown if the AUTO PILOT Circuit Breaker is secured in the open position so that the autopilot is disconnected from electrical power and will not operate until it is repaired.

4. BARO Setting flashing - SET current local barometer (atmospheric pressure) using knobs or push BARO button to accept the present setting.

5. AUTOPILOT - ENGAGE (push and hold AP button for 1 second).

6. FLIGHT CONTROLS - MOVE. Make sure that the autopilot can be overpowered in both pitch axis and roll axis.

7. A/P DISC/TRIM INT Switch - PUSH. Make sure that the autopilot disengages. Make sure that the disengagement warning sound is heard.

(Continued Next Page)

NORMAL PROCEDURES (Continued)

8. ELEVATOR TRIM WHEEL - SET pointer to takeoff position.

WARNING

- **WHEN THE AUTOPILOT IS ENGAGED, THE PILOT-IN-COMMAND MUST CONTINUOUSLY MONITOR AND BE READY TO DISENGAGE THE AUTOPILOT AS NOTED ABOVE. DO THE EMERGENCY RECOVERY PROCEDURE IF AUTOPILOT OPERATION IS ERRATIC OR DOES NOT CORRECTLY CONTROL THE AIRPLANE.**

- **DURING AUTOPILOT OPERATIONS, THE PILOT-IN-COMMAND MUST SET THE AUTOPILOT VS (VERTICAL SPEED) RATE AND ENGINE POWER TO MAKE SURE THAT AIRSPEED STAYS BETWEEN 80 KIAS AND 160 KIAS AND DOES NOT EXCEED ANY OTHER AIRPLANE OPERATING LIMITATION.**

NOTE

Autopilot tracking performance will not be as good as usual in turbulence.

9. AVIONICS BUS 2 Switch - OFF

10. MASTER Switch (BAT) - OFF

BEFORE TAKEOFF

1. A/P DISC/TRIM INT Switch - PUSH.

(Continued Next Page)

NORMAL PROCEDURES (Continued)

2. BARO - SET.

CAUTION

CONTINUE TO SET BARO THROUGHOUT THE FLIGHT WHEN THE ALTIMETER SETTING CHANGES. NO FLASHING BARO SETTING WILL BE SHOWN TO REMIND THE PILOT.

3. ALTITUDE SELECT - SET target altitude using knobs.

CAUTION

THERE IS NO CONNECTION BETWEEN THE G1000 ALT SEL FEATURE AND THE KAP 140 ALTITUDE ALERT FUNCTION.

NOTE

1000 feet before the altitude selection, an electronic sound (tone) will be supplied for the pilot. Altitude changes of more than 200 feet from the altitude selection will cause a series of short tones to alert the pilot.

AFTER TAKEOFF

1. Elevator Trim - SET to trim airplane before engaging the autopilot.

NOTE

If the autopilot is engaged when the airplane is out-of-trim, the result can be an unwanted altitude change, TRIM FAIL annunciation and autopilot disengagement.

2. Airspeed and Rate-of-Climb - STABLE.

(Continued Next Page)

NORMAL PROCEDURES (Continued)

NOTE

Only engage the autopilot during wings-level stable flight. The autopilot will come on in ROL (wings leveler) and VS (Vertical Speed) modes. The VS mode initial rate-of-climb will be the vertical speed at the time the autopilot is engaged. Do not engage the autopilot when the airplane cannot hold the climb rate because of excessive pitch attitude, low airspeed, low engine power or high airplane weight. Do not engage the autopilot when the performance or operation of the autopilot or airplane will not obey the limitations.

3. AP Button - PUSH and HOLD. Make sure that ROL and VS are shown on the face of the autopilot. If no selection of other operating modes is made, the autopilot will operate in ROL and VS modes.

NOTE

When operating in ROL mode, turbulence may result in changes to airplane heading. ROL mode only works to keep the wings level.

4. Make HDG or NAV mode selection as applicable (optional).

WARNING

- **WHEN OPERATING THE AUTOPILOT IN VS MODE WITH POWER SET FOR CLIMB AND AIRSPEED AT OR NEAR BEST RATE-OF-CLIMB, CONTINUED OPERATION IN VS MODE CAN RESULT IN A STALL. IF NECESSARY, DISENGAGE THE AUTOPILOT AND RETURN THE AIRPLANE TO STABLE CLIMB BEFORE ENGAGING THE AUTOPILOT AGAIN.**

(Continued Next Page)

NORMAL PROCEDURES (Continued)

WARNING

- **WHEN OPERATING AT OR NEAR AUTOPILOT MAXIMUM AIRSPEED, REDUCE POWER TO CONTROL THE DESIRED RATE-OF-DESCENT AND KEEP THE AIRSPEED LESS THAN THE AUTOPILOT MAXIMUM LIMIT.**

- **DO NOT MOVE THE CONTROL WHEEL WHEN THE AUTOPILOT IS ENGAGED. IF THE PILOT TRIES TO FLY THE AIRPLANE MANUALLY WHEN THE AUTOPILOT IS ENGAGED OR TRIES TO MANUALLY "HELP" THE AUTOPILOT, THE AUTOPILOT WILL ADJUST PITCH TRIM TO OPPOSE CONTROL WHEEL MOVEMENT AND CAUSE THE AIRPLANE TO GO OUT OF TRIM. THE OUT-OF-TRIM CONDITION WILL CAUSE LARGE ELEVATOR CONTROL FORCES WHEN THE AUTOPILOT IS DISENGAGED.**

CLIMB OR DESCENT

1. BARO - SET current altimeter.

2. VS (Vertical Speed) Mode:
   UP or DN Buttons - PUSH button to set airplane vertical speed in 100 feet per minute (ft/min) increments. PUSH and HOLD the button for the KAP 140 to increase the vertical speed at approximately 300 ft/min/sec to the desired value, then RELEASE. The rate will be set at the time of button release.

CAUTION

THE VERTICAL SPEED MODE HAS SYSTEM LIMITS OF ± 2000 FEET PER MINUTE. OPERATING THE MODEL 172S NEAR THESE LIMITS IS NOT RECOMMENDED

(Continued Next Page)

NORMAL PROCEDURES (Continued)

3. POWER - SET as applicable for vertical speed selection.

NOTE

The autopilot can hold a set vertical speed only if engine power and airplane weight are correct for the conditions. If the vertical speed set for the autopilot is more than the airplane can supply and airspeed decreases sufficiently, the airplane can be made to stall. Make sure that the vertical speed set for the autopilot results in airplane performance that stays in the operating limitations of both the autopilot and the airplane.

ALTITUDE PRESELECT MODE (ALTITUDE LOCK ON).

1. ALTITUDE SELECT - SET target altitude using knob on KAP 140.

2. ALTITUDE ARM - PUSH the ARM button to set the Altitude Lock On feature to the ON position (if needed). ALT ARM will show on the face of the autopilot when Altitude Lock On is set to the ON condition.

NOTE

- Minor differences between the autopilot altitude selection and the airplane altitude indication may be seen after altitude lock on. This small difference is generally due to autopilot system tolerances.
- Use of Altitude Preselect (Lock On) mode is not recommended for lock on at minimum descent altitude (MDA) during non-precision instrument approach procedures due to the possibility of altitude overshoot. Glideslope (GS) lock on during an ILS approach will prevent lock on to a preselect altitude selection.
- Use Vertical Speed mode as described previously in CLIMB or DESCENT for altitude change.

(Continued Next Page)

NORMAL PROCEDURES (Continued)

ALTITUDE HOLD

1. ALT Button - PUSH (Make sure that the ALT annunciator on the front of the autopilot comes on). The autopilot will stay at the set altitude.

NOTE

- If the ALT button is pushed while the airplane is climbing or descending, the airplane may go through the altitude selection by approximately 10% of the vertical rate (example: 500 ft/min = approximately 50 feet), but will quickly lock on and correct to the target altitude.

- In Advisory Circular AC00-24B "Thunderstorms", the FAA recommends the use of "Pitch Attitude Hold" for autopilot operation in severe turbulence. The KAP 140 does not use pitch reference, so it is recommended that the autopilot be disengaged and the airplane flown manually in severe turbulence.

CHANGING ALTITUDE

If the autopilot is engaged in ALT mode (Altitude Hold):

1. For small altitude changes (less than 100 feet), push the UP or DN button momentarily to program an increase or decrease to the altitude selection, as applicable, of 20 feet each time the button is pushed. This lets the autopilot make small corrections to the altitude selection.

2. For larger altitude changes, push and HOLD the UP or DN button, as applicable, to start a 500 ft/min altitude change. Release the button at the altitude the autopilot is to hold.

(Continued Next Page)

NORMAL PROCEDURES (Continued)

If the autopilot is engaged in VS mode (Vertical Speed):

1. UP or DN Button - PUSH momentarily for 100 ft/min vertical speed increments or PUSH and HOLD for 300 ft/min/sec vertical rate change and RELEASE at the rate desired. The autopilot will climb or descend at rate selection.

NOTE

- The autopilot can hold a Vertical Speed selection only if engine power and airplane weight are correct for the conditions. If the vertical speed set for the autopilot is more than the airplane can supply and airspeed decreases sufficiently, the airplane can be made to stall. Make sure that the vertical speed set for the autopilot results in airplane performance that stays in the operating limitations of both the autopilot and the airplane.

- When operating at or near the best rate-of-climb airspeed, with the engine set to climb power or when in Vertical Speed mode, it can be easy to slow to airspeeds where any additional reduction in airspeed will result reduced rate-of-climb. Hold sufficient airspeed during Vertical Speed mode operation to avoid a stall.

HEADING (HDG) MODE OPERATION

1. HDG knob - SET the heading pointer ("bug") on the G1000 HSI to the correct magnetic heading using the HDG knob on the PFD.

2. HDG Button - PUSH to engage HDG mode. Make sure that the HDG annunciator is shown on the face of the autopilot. The autopilot will turn the airplane at approximately standard rate (3°/sec) to lock on to the heading selection.

(Continued Next Page)

NORMAL PROCEDURES (Continued)

NAVIGATION (NAV) MODE OPERATION

The KAP 140 Autopilot will operate in NAV mode using GPS or VHF (VOR or LOC) navigation signal inputs. The G1000 HSI shows the GPS, NAV 1 or NAV 2 navigation signal being supplied to the autopilot. The navigation source selection shown on the HSI is made using the CDI softkey.

If using NAV 1 or NAV 2, make sure that the radio is adjusted to the correct frequency and is the active frequency. Make sure that NAV 1 or NAV 2, as applicable, is shown on the HSI.

WARNING

WHEN THE KAP 140 AUTOPILOT IS ENGAGED IN NAV, APR OR REV OPERATING MODE, IF THE HSI NAVIGATION SOURCE IS CHANGED FROM GPS TO NAV1, AUTOMATICALLY OR MANUALLY (USING THE CDI SOFTKEY), OR MANUALLY FROM NAV2 TO GPS, THE CHANGE WILL INTERRUPT THE SIGNAL TO THE AUTOPILOT AND CAUSE THE AUTOPILOT TO GO BACK TO ROL MODE OPERATION. NO WARNING CHIME OR PFD ANNUNCIATION WILL BE SUPPLIED. THE PREVIOUSLY-SELECTED MODE SYMBOL SHOWN ON THE FACE OF THE AUTOPILOT WILL FLASH TO SHOW THE CHANGE TO ROL MODE OPERATION. IN ROL MODE, THE AUTOPILOT WILL ONLY KEEP THE WINGS LEVEL AND WILL NOT CORRECT THE AIRPLANE HEADING OR COURSE. SET THE HDG BUG TO THE CORRECT HEADING AND SELECT THE CORRECT NAVIGATION SOURCE ON THE HSI USING THE CDI SOFTKEY BEFORE ENGAGING THE AUTOPILOT IN ANY OTHER OPERATING MODE.

(Continued Next Page)

NORMAL PROCEDURES (Continued)

CAUTION

THE G1000 HSI SHOWS A COURSE DEVIATION INDICATOR FOR THE GPS, NAV 1 OR NAV 2 NAVIGATION SOURCE SELECTION. THE G1000 HSI DOES NOT PROVIDE A WARNING "FLAG" WHEN A VALID NAVIGATION SIGNAL IS NOT BEING SUPPLIED TO THE INDICATOR. WHEN A VALID NAVIGATION SIGNAL IS NOT BEING SUPPLIED, THE COURSE DEVIATION INDICATION BAR (D-BAR) PART OF THE INDICATOR IS NOT SHOWN ON THE HSI COMPASS CARD. THE MISSING D-BAR IS CONSIDERED TO BE THE WARNING FLAG.

NOTE

When navigating using GPS, make sure that the GPS 2 unit is available on the G1000 MFD AUX - GPS STATUS page. No annunciation is provided for GPS 2 malfunction.

NAV COURSE CAPTURE (LOCK ON)

1. CRS Pointer - SET the HSI course pointer to the desired magnetic course using the CRS knob on the PFD.

NOTE

If operating GPS-Direct (Direct-to) or on an active GPS Flight Plan, the course pointer will be automatically set by the G1000.

2. HDG bug - SET the HSI heading bug to the desired course intercept heading.

3. HDG Button - PUSH to engage KAP 140 in heading mode. Make sure that the HDG annunciation is shown on the face of the autopilot.

(Continued Next Page)

NORMAL PROCEDURES (Continued)

4. NAV Button - PUSH to arm the autopilot NAV lock on function. Make sure that the autopilot is correctly engaged from the annunciation on the autopilot:

   a. If the HSI D-Bar is less than 2 to 3 dots from center, the autopilot will go to NAV mode. The NAV annunciator will be shown on the face of the autopilot.

   b. If the HSI D-Bar is more than 2 to 3 dots from center, the NAVARM annunciator will be shown on the face of the autopilot. When the computed intercept point is reached, the ARM annunciator will go off and lock on (capture and track) will begin automatically. The NAV annunciator will stay on the face of the autopilot.

GPS NAV AND ROLL STEERING

The KAP 140 Autopilot has DC (analog) Roll Steering capability. Roll Steering enables the Flight Guidance System (in this case, the G1000 GPS navigation computer) to control the autopilot through automatic course changes at flight plan waypoints and to lock on to the course to the next waypoint.

The GPS navigation computer uses ground speed, track and turn-rate data to calculate the bank angle required for waypoint course changes (the KAP 140 limits bank angle in the 172S to approximately 18°). The GPS Roll Steering signal will make the autopilot turn the airplane and lock on course to the next waypoint without flying directly over the current waypoint, except for designated fly-over waypoints. The flight path is approximately tangent to the inbound and outbound flight plan legs.

(Continued Next Page)

NORMAL PROCEDURES (Continued)

The distance from the waypoint to start the turn will vary with groundspeed, degrees of heading change, etc., but will usually be approximately 0.5 nautical mile from the waypoint. Flight plan sequencing to the next waypoint will occur at approximately the midpoint of the turn.

Roll Steering works only if all the following conditions are true:

1. GPS must be the navigation source shown on the G1000 HSI.
2. The GPS navigation computer must be executing an active flight plan.
3. The KAP 140 must be engaged in NAV or APR mode.
4. The GPS must not be operating in OBS mode (PFD).

NOTE

When on an active GPS flightplan with the KAP 140 Autopilot coupled in NAV or APR mode, waypoint course changes greater than approximately 140° could result in a turn rate that reaches the autopilot bank angle limit. The pilot may need to change the KAP 140 to HDG mode (also arm NAV or APR mode) and manually set the intercept heading to help the autopilot lock on the new course.

HOLDING PATTERNS AND PROCEDURE TURNS:

When operating IFR on an active GPS flight plan, enroute or transitioning to the terminal environment, a holding pattern or course reversal maneuver may be necessary. The G1000 GPS does not provide course guidance through these maneuvers. The pilot must set both the G1000 and the KAP 140 to the correct operating mode and provide course guidance.

The Holding Pattern is usually shown on the MFD Navigation Map (for a published holding fix), but it is not included as a leg of the flight plan. GPS flight plan execution must be paused by entering OBS mode and using autopilot HDG or NAV modes, as applicable, to perform the maneuver.

(Continued Next Page)

NORMAL PROCEDURES (Continued)

The Procedure Turn is included as a leg in the flight plan along with the instrument approach procedure selection. Course guidance is supplied through the turn to outbound course lock on, but is discontinued after approximately 1 minute. G1000 OBS mode is not required but the KAP 140 must be set to HDG mode and the HDG bug used to provide guidance through the course reversal. When established inbound, change from HDG to APR mode for lock on to the final approach course.

For a KAP 140 that has been operating in NAV mode on an active GPS flight plan:

On arrival at the Holding Fix, set the KAP 140 in HDG mode and provide course guidance by manually adjusting the G1000 HDG bug to command turns and heading, as applicable. Pause G1000 flight plan execution during the holding pattern by using the OBS mode selection on the PFD. Set the correct inbound holding course on the HSI course pointer and NAV mode may be used for the KAP 140 on the inbound leg of the holding pattern for course guidance, but HDG mode must be used for the remainder of the holding pattern maneuver. At the end of the holding procedure, exit OBS mode to start the flight plan executing again and set NAV mode on the KAP 140 to lock on to the course. See the Garmin G1000 Cockpit Reference Guide for further information.

Arriving at the IAF (usual starting point for the Procedure Turn maneuver), the G1000 will command the autopilot to turn to the outbound course and will provide course guidance for a short time (approximately 1 minute). Unlike the Holding Pattern, the G1000 includes the Procedure Turn as a leg in the flight plan, so no OBS mode change is needed. Set the HDG bug to the Procedure Turn outbound leg heading and push the HDG button on the KAP 140 to start the turn. After the correct time flying outbound, adjust the HDG bug to make the turn to the procedure turn inbound heading. When established on the procedure turn inbound, push the APR button on the KAP 140 to lock on to the final approach course. See the Garmin G1000 Cockpit Reference Guide for further information.

(Continued Next Page)

NORMAL PROCEDURES (Continued)

APPROACH (APR) MODE OPERATION

APR mode gives more precise tracking during instrument approach procedures. It engages automatic lock on to the final approach course on most approaches and automatic capture of the glideslope on ILS approaches.

The G1000 System will automatically change from GPS to ILS at final approach course lock on (only when the procedure has been activated in the flight plan and the ILS CDI Capture feature is enabled). Automatic change to VHF navigation is only provided for ILS approaches.

WARNING

WHEN THE KAP 140 AUTOPILOT IS ENGAGED IN NAV, APR OR REV OPERATING MODE, IF THE HSI NAVIGATION SOURCE IS CHANGED FROM GPS TO NAV1, AUTOMATICALLY OR MANUALLY (USING THE CDI SOFTKEY), OR MANUALLY FROM NAV2 TO GPS, THE CHANGE WILL INTERRUPT THE SIGNAL TO THE AUTOPILOT AND CAUSE THE AUTOPILOT TO GO BACK TO ROL MODE OPERATION. NO WARNING CHIME OR PFD ANNUNCIATION WILL BE SUPPLIED. THE PREVIOUSLY-SELECTED MODE SYMBOL SHOWN ON THE FACE OF THE AUTOPILOT WILL FLASH TO SHOW THE CHANGE TO ROL MODE OPERATION. IN ROL MODE, THE AUTOPILOT WILL ONLY KEEP THE WINGS LEVEL AND WILL NOT CORRECT THE AIRPLANE HEADING OR COURSE. SET THE HDG BUG TO THE CORRECT HEADING AND SELECT THE CORRECT NAVIGATION SOURCE ON THE HSI USING THE CDI SOFTKEY BEFORE ENGAGING THE AUTOPILOT IN ANY OTHER OPERATING MODE.

(Continued Next Page)

NORMAL PROCEDURES (Continued)

NOTE

Changing from GPS to ILS includes tuning the NAV 1 active frequency to the correct LOC frequency, slewing the course pointer to the applicable final approach course magnetic heading and changing the CDI to NAV 1 while keeping the autopilot in APR mode. The G1000 will do this automatically if ILS CDI Capture is set to AUTO

Roll Steering will only operate on instrument approach procedures selected from a current GPS aeronautical database when:

1. The autopilot is engaged in NAV or APR mode.

2. GPS is shown as the navigation source on the HSI.

NOTE

- Make sure that the applicable GPS mode is set during each portion of the approach procedure selection symbol (NAV, APR or REV) flashing on the face of the autopilot.

- If either the GPS or VHF navigation signal, as applicable, fails when the autopilot is engaged in NAV, APR or REV mode, the autopilot will change back to ROL mode operation. ROL mode operation is shown by the previous mode

APPROACH (APR) CAPTURE (LOCK ON)

1. BARO - SET current local barometric pressure (altimeter).

2. CRS Pointer - SET the HSI course pointer to the desired magnetic course using the CRS knob on the PFD.

NOTE

If operating GPS-Direct (Direct-to) or on an active GPS Flight Plan, the course pointer will be automatically set by the G1000.

(Continued Next Page)

NORMAL PROCEDURES (Continued)

3. HDG bug - SET the HSI heading bug to the desired course intercept heading.

4. HDG Button - PUSH to engage autopilot HDG mode. Make sure that HDG is shown on the face of the autopilot

5. APR Button - PUSH to arm the autopilot APR lock on function. Make sure that the autopilot is correctly engaged from the annunciation on the autopilot:

   a. If the HSI D-Bar is less than 2 to 3 dots from center, the autopilot will go to APR mode. The APR annunciator will be shown on the face of the autopilot.

   b. If the HSI D-Bar is more than 2 to 3 dots from center, the APR ARM annunciator will be shown on the face of the autopilot. When the computed intercept point is reached, the ARM annunciator will go off and lock on (capture and track) will begin automatically. The APR annunciator will stay on the face of the autopilot.

(Continued Next Page)

NORMAL PROCEDURES (Continued)

WARNING

WHEN THE KAP 140 AUTOPILOT IS ENGAGED IN NAV, APR OR REV OPERATING MODE, IF THE HSI NAVIGATION SOURCE IS CHANGED FROM GPS TO NAV1, AUTOMATICALLY OR MANUALLY (USING THE CDI SOFTKEY), OR MANUALLY FROM NAV2 TO GPS, THE CHANGE WILL INTERRUPT THE SIGNAL TO THE AUTOPILOT AND CAUSE THE AUTOPILOT TO GO BACK TO ROL MODE OPERATION. NO WARNING CHIME OR PFD ANNUNCIATION WILL BE SUPPLIED. THE PREVIOUSLY-SELECTED MODE SYMBOL SHOWN ON THE FACE OF THE AUTOPILOT WILL FLASH TO SHOW THE CHANGE TO ROL MODE OPERATION. IN ROL MODE, THE AUTOPILOT WILL ONLY KEEP THE WINGS LEVEL AND WILL NOT CORRECT THE AIRPLANE HEADING OR COURSE. SET THE HDG BUG TO THE CORRECT HEADING AND SELECT THE CORRECT NAVIGATION SOURCE ON THE HSI USING THE CDI SOFTKEY BEFORE ENGAGING THE AUTOPILOT IN ANY OTHER OPERATING MODE.

6. Airspeed - HOLD 100 KIAS minimum (recommended) during approaches when the autopilot is engaged.

GLIDESLOPE ENGAGEMENT AND LOCK-ON

1. APR Mode - ENGAGED. Make sure that GSARM is shown on the face of the autopilot.

NOTE

The glideslope cannot lock-on when the autopilot is engaged in NAV or REV modes. Engaged in APR mode, with NAV 1 or NAV 2 set to the correct ILS frequency, and shown as the related HSI navigation source, the glideslope becomes armed at localizer lock-on.

(Continued Next Page)

NORMAL PROCEDURES (Continued)

2. Glideslope Indicator - CENTERED. Make sure that the ARM annunciator goes out and the GS annunciator stays on.

NOTE

The KAP 140 can lock on the glideslope from above or below. Capturing the glideslope from above is not recommended.

3. Airspeed - HOLD 100 KIAS minimum (recommended) during approaches when the autopilot is engaged.

BACK COURSE (REV) MODE OPERATION

This mode provides reverse sensing for the autopilot navigation course on Back Course-type Localizer approaches.

1. BARO - SET current local barometric pressure (altimeter).

2. CRS Pointer - SET the HSI course pointer to the ILS front course inbound heading using the CRS knob on the PFD.

3. HDG bug - SET the HSI heading bug to the desired course intercept heading.

4. HDG Button - PUSH to engage HDG mode. Make sure that HDG is shown on the face of the autopilot.

5. REV Button - PUSH to arm the autopilot REV lock-on function. Make sure that the autopilot is correctly engaged from the annunciation on the autopilot:

   a. If the HSI D-Bar is less than 2 to 3 dots from center, the autopilot will go to REV mode. The REV annunciator will be shown on the face of the autopilot.

   b. If the HSI D-Bar is more than 2 to 3 dots from center, the REV_{ARM} annunciator will be shown on the face of the autopilot. When the computed intercept point is reached, the ARM annunciator will go off and lock on (capture and track) will begin automatically. The REV annunciator will stay on.

(Continued Next Page)

NORMAL PROCEDURES (Continued)

6. Airspeed - HOLD 100 KIAS minimum (recommended) during approaches when the autopilot is engaged.

MISSED APPROACH

1. A/P DISC/TRIM INT Switch - PUSH to disengage the autopilot.

2. Missed Approach Procedure - EXECUTE.

3. If autopilot is to be engaged:

   a. Elevator Trim - SET.

   b. Airspeed and Rate-of-Climb - STABILIZED.

WARNING

THE G1000 WILL ENTER SUSP MODE (STOP THE FLIGHT PLAN) AT THE MISSED APPROACH POINT (MAP) AND WILL NOT SUPPLY A NAVIGATION SIGNAL TO THE KAP 140. IF THE G1000 IS TO BE USED FOR COURSE GUIDANCE TO THE MISSED APPROACH HOLDING POINT (MAHP), PUSH THE SUSP SOFTKEY TO START THE FLIGHT PLAN AND NAVIGATION SIGNAL AGAIN BEFORE ENGAGING THE KAP 140.

NOTE

- Only engage the autopilot during wings-level stable flight. The autopilot will come on in ROL (wings leveler) and VS (Vertical Speed) modes. The VS mode initial rate-of-climb will be the vertical speed at the time the autopilot is engaged. Do not engage the autopilot when the airplane cannot hold the climb rate because of excessive pitch attitude, low airspeed, low engine power or high airplane weight. Do not engage the autopilot when the performance or operation of the autopilot or airplane would not obey the limitations.

(Continued Next Page)

NORMAL PROCEDURES (Continued)

- The autopilot can hold a Vertical Speed selection only if engine power and airplane weight are correct for the conditions. If the vertical speed set for the autopilot is more than the airplane can supply and airspeed decreases sufficiently, the airplane can be made to stall. Make sure that the vertical speed set for the autopilot results in airplane performance that stays in the operating limitations of both the autopilot and the airplane.

- When operating at or near the best rate-of-climb airspeed, with the engine set to climb power or when in Vertical Speed mode, it can be easy to slow to airspeeds where any additional reduction in airspeed will result reduced rate-of-climb. Hold sufficient airspeed during Vertical Speed mode operation to avoid a stall.

c. AP Button - PUSH and HOLD to engage the autopilot. Make sure that ROL and VS are shown on the face of the autopilot. If no selection of other operating modes is made, the autopilot will operate in ROL and VS modes.

NOTE

When operating in ROL mode, turbulence may result in changes to airplane heading. ROL mode only works to keep the wings level. When tracking the ILS course outbound on the missed approach procedure, use NAV mode to prevent unwanted GS coupling.

BEFORE LANDING

1. A/P DISC/TRIM INT Switch - PUSH to disengage the autopilot.

PERFORMANCE

There is no change in airplane performance when the KAP 140 Autopilot is installed. See Section 2 for Limitations that can have an effect on airplane performance.

Cessna
A Textron Company

Pilot's Operating Handbook
and
FAA Approved Airplane Flight Manual

CESSNA MODEL 172S
NAV III AIRPLANES

Serials 172S9810 and On

SUPPLEMENT 4
WINTERIZATION KIT

SERIAL NO._____

REGISTRATION NO._____

This supplement must be inserted into Section 9 of the Pilot's Operating Handbook and FAA Approved Airplane Flight Manual when the Winterization Kit is installed.

Member of GAMA

APPROVED BY FAA APPROVED UNDER 14 CFR PART 21 SUBPART
Cessna Aircraft Co.
Delegation Option Authorization DOA-230004-CE
[signature] DOA Administrator

DATE OF APPROVAL 02-25-05

COPYRIGHT © 2005
CESSNA AIRCRAFT COMPANY
WICHITA, KANSAS, USA

172SPHAUS-S4-00

25 FEBRUARY 2005

SUPPLEMENT 4

WINTERIZATION KIT

Use the Log of Effective Pages to determine the current status of this supplement.

Pages affected by the current revision are indicated by an asterisk (*****) preceding the page number.

Supplement Status	Date
Original	25 February 2005

LOG OF EFFECTIVITY PAGES

Page Number	Page Status	Revision Number
S4-1 thru S4-4	Original	0

SERVICE BULLETIN CONFIGURATION LIST

The following is a list of Service Bulletins that are applicable to the operation of the airplane, and have been incorporated into this supplement. This list contains only those Service Bulletins that are currently active.

Number	Title	Airplane Serial Effectivity	Revision Incorporated	Incorporated in Airplane

WINTERIZATION KIT

GENERAL

The winterization kit consists of two cover plates (with placards) which attach to the air intakes in the cowling nose cap and a placard silk screened on the instrument panel. This equipment should be installed for operations in temperatures consistently below 20°F (-7°C).

LIMITATIONS

The following information must be presented in the form of placards when the airplane is equipped with a winterization kit.

1. On each nose cap cover plate:

REMOVE WHEN O.A.T. EXCEEDS +20°F.

2. On the instrument panel below the Primary Flight Display (PFD):

WINTERIZATION KIT MUST BE REMOVED WHEN OUTSIDE AIR TEMPERATURE IS ABOVE 20°F.

EMERGENCY PROCEDURES

There is no change to the airplane emergency procedures when the winterization kit is installed.

NORMAL PROCEDURES

There is no change to the airplane normal procedures when the winterization kit is installed.

PERFORMANCE

There is no change to the airplane performance when the winterization kit is installed.

Cessna
A Textron Company

Pilot's Operating Handbook And FAA Approved Airplane Flight Manual

SKYHAWK SP

CESSNA MODEL 172S

NAV III AVIONICS OPTION
Serials 172S9810 and On

SUPPLEMENT 5
BRAZILIAN CERTIFIED AIRPLANES

SERIAL NO. _____
REGISTRATION NO. _____

This supplement must be inserted into Section 9 of the Pilot's Operating Handbook and FAA Approved Airplane Flight Manual when used for Brazilian Certified Airplanes and is approved by the U.S. Federal Aviation Administration (FAA) on behalf of the "Agência Nacional de Aviação Civil" (ANAC) for Brazilian Registered Airplanes, in accordance with the "Regulamento Brasileiro de Homologação Aeronáutica" (RBHA) 21, Section 21.29.

APPROVED BY

FAA APPROVED UNDER 14 CFR PART 21 SUBPART J
Cessna Aircraft Co.
Delegation Option Authorization DOA-230594-CE
Victoria E. Huff Administrative Aid

Member of GAMA

DATE OF APPROVAL 1 FEBRUARY 2006

1 FEBRUARY 2006

REVISION 1 2 NOVEMBER 2006

COPYRIGHT © 2006
CESSNA AIRCRAFT COMPANY
WICHITA, KANSAS, USA

SUPPLEMENT 5

BRAZILIAN CERTIFIED AIRPLANES

Use the Log of Effective Pages to determine the current status of this supplement.

Pages affected by the current revision are indicated by an asterisk (*) preceding the page number.

Supplement Status	Date
Original Issue	1 February 2006
Revision 1	2 November 2006

LOG OF EFFECTIVE PAGES

Page Number	Page Status	Revision Number
* S5-1 thru S5-2	Revised	1
S5-3 thru S5-4	Original	0
* S5-5/S5-6	Revised	1

APPROVED BY

FAA APPROVED UNDER 14 CFR PART 21 SUBPART J
Cessna Aircraft Co.
Delegation Option Authorization DOA-230594-CE

RLS Administrative AR

DATE OF APPROVAL 02 November 2006

SERVICE BULLETIN CONFIGURATION LIST

The following is a list of Service Bulletins that are applicable to the operation of the airplane, and have been incorporated into this supplement. This list contains only those Service Bulletins that are currently active.

Number	Title	Airplane Serial Effectivity	Revision Incorporated	Incorporated in Airplane

GENERAL

This supplement is required for Brazilian operation of Cessna Model 172S With Nav III Avionics option.

OPERATING LIMITATIONS

There is no change to the airplane operating limitations when used for Brazilian operation.

EMERGENCY PROCEDURES

There is no change to the airplane emergency procedures when used for Brazilian operation.

NORMAL PROCEDURES

There is no change to the airplane normal procedures when used for Brazilian operation.

PERFORMANCE

There is no change to the airplane performance when used for Brazilian operation.

LOG OF ANAC APPROVED SUPPLEMENTS

The following list contains ANAC accepted supplements. Refer to Log of Approved Supplements in the basic Pilot's Operating Handbook and FAA Approved Airplane Flight Manual for revision status.

Supplement Number	Name	Equipment Installed
1	Pointer Model 3000-11 Or Model 4000-11 Emergency Locator Transmitter (ELT)	_____
2	Reserved	
3	Bendix/King KAP 140 2 Axis Autopilot	_____
4	Winterization Kit	_____
5	Brazilian Certified Airplanes	_____
6	Artex C406-N Emergency Locator Transmitter (ELT)	_____
7	Bendix/King KR 87 Automatic Direction Finder (ADF)	_____

Cessna
A Textron Company

Pilot's Operating Handbook And FAA Approved Airplane Flight Manual

SKYHAWK SP

CESSNA MODEL 172S

NAV III AVIONICS OPTION
Serials 172S9810 and On

SUPPLEMENT 6

ARTEX C406-N
EMERGENCY LOCATOR TRANSMITTER (ELT)

SERIAL NO. _____
REGISTRATION NO. _____

This supplement must be inserted into Section 9 of the Pilot's Operating Handbook and FAA Approved Airplane Flight Manual when the Artex C406-N Emergency Locator Transmitter (ELT) is installed.

APPROVED BY

FAA APPROVED UNDER 14 CFR PART 21 SUBPART J
Cessna Aircraft Co.
Delegation Option Authorization DOA-230594-CE
Victoria E. Soff Administrative AR Veg

Member of GAMA

DATE OF APPROVAL 14 FEBRUARY 2006

14 FEBRUARY 2006

REVISION 1 16 NOVEMBER 2006

COPYRIGHT © 2006
CESSNA AIRCRAFT COMPANY
WICHITA, KANSAS, USA

SUPPLEMENT 6

ARTEX C406-N EMERGENCY LOCATOR TRANSMITTER (ELT)

Use the Log of Effective Pages to determine the current status of this supplement.

Pages affected by the current revision are indicated by an asterisk (*) preceding the page number.

Supplement Status	Date
Original Issue	14 February 2006
Revision 1	16 November 2006

LOG OF EFFECTIVE PAGES

Page Number	Page Status	Revision Number
* S6-1 thru S6-2	Revised	1
S6-3	Original	0
* S6-4 thru S6-6	Revised	1
* S6-7 thru S6-8	Added	1

APPROVED BY

FAA APPROVED UNDER 14 CFR PART 21 SUBPART J
Cessna Aircraft Co.
Delegation Option Authorization DOA-230594-CE
Administrative AR
RLS

DATE OF APPROVAL 16 November 2006

SERVICE BULLETIN CONFIGURATION LIST

The following is a list of Service Bulletins that are applicable to the operation of the airplane, and have been incorporated into this supplement. This list contains only those Service Bulletins that are currently active.

Number	Title	Airplane Serial Effectivity	Revision Incorporated	Incorporated in Airplane

ARTEX C406-N EMERGENCY LOCATOR TRANSMITTER (ELT)

GENERAL

The Artex C406-N Emergency Locator Transmitter (ELT) installation uses a solid-state 3-frequency transmitter powered by an internal lithium battery. The navigation function of the C406-N ELT receives power from the airplane's main battery thru Avionics Bus 1 and the Essential Bus. The C406-N is also equipped with an instrument panel-mounted remote switch assembly, that includes a red warning light, and an external antenna mounted on the top of the tailcone. The remote switch assembly is installed along the top right side of the instrument panel and controls ELT operating modes from the flight crew station. When the remote switch is set to the ARM position, the transmitter is energized only when the internal "G-switch" senses longitudinal inertia forces per TSO-C91a/TSO-C126. When the remote switch is set to the ON position, the transmitter is immediately energized.

The C406-N transmitter unit is located in the tailcone along the right side behind the baggage compartment aft panel. On the ELT transmitter unit is a panel containing an ON/OFF switch and a transmitter warning light.

The ELT installation uses two different warnings to tell the pilot when the ELT is energized. The aural warning is an unusual sound that is easily heard by the pilot. The visual warning is a flashing red light directly above the remote switch that shows the pilot that the ELT has been activated.

When the C406-N is energized, the ELT transmits the standard swept tone signal on the international VHF frequency of 121.5 MHz and UHF frequency of 243.0 MHz until battery power is gone. The 121.5 MHz signal is mainly used to pinpoint the beacon during search and rescue operations, and is monitored by general aviation, commercial aircraft, and government agencies.

In addition, for the first 24 hours of the ELT being energized, a 406.028 MHz signal is transmitted at 50 second intervals. This transmission lasts 440 milliseconds and contains identification data programmed into the ELT and is received by COSPAS/SARSAT satellites. The transmitted data may include the Aircraft ID, GPS coordinates, ELT Serial Number, Country Code, and COSPAS/SARSAT ID.

(Continued Next Page)

ARTEX C406-N ELT CONTROL PANEL

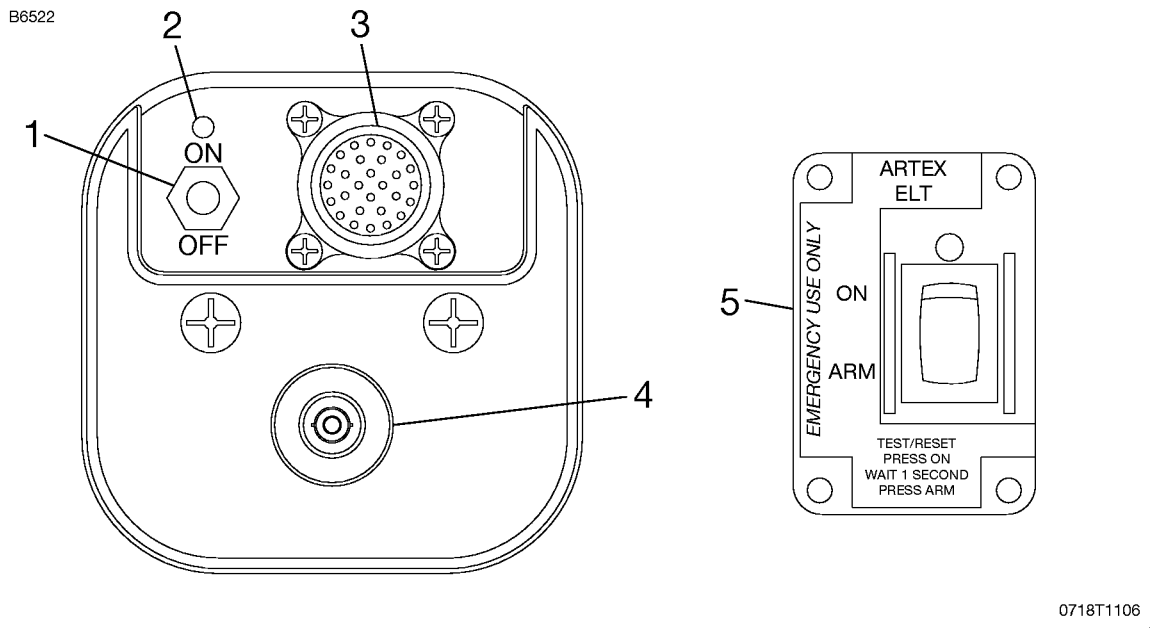

1. ELT PANEL SWITCH (2-Position Toggle Switch):
   a. OFF - Turns OFF and ARMS transmitter for automatic activation if “G” switch senses a predetermined deceleration level.
   b. ON - Activates transmitter instantly. The ON position bypasses the automatic activation switch. The RED warning light on ELT panel and on the remote switch assembly mounted on the instrument panel should come on.
2. TRANSMITTER WARNING LIGHT - Light comes on RED to indicate the transmitter is transmitting a distress signal.
3. REMOTE CABLE JACK - Connects to the ELT remote switch assembly located on the upper right instrument panel.
4. ANTENNA RECEPTACLE - Connects to the antenna mounted on top of tailcone.
5. REMOTE SWITCH ASSEMBLY - (2-Position Rocker Switch):
   a. ARM (OFF) - Turns OFF and ARMS transmitter for automatic activation if “G” switch senses a predetermined deceleration level.
   b. ON - Remotely activates the transmitter for test or emergency situations. The RED warning light above the rocker switch comes on to indicate that the transmitter is transmitting a distress signal.

Figure S6-1

OPERATING LIMITATIONS

There are no additional airplane operating limitations when the Artex C406-N ELT is installed.

The airplane owner or operator must register the C406-N ELT with the applicable civil aviation authority before use to make sure that the identification code transmitted by the ELT is in the COSPAS/SARSAT database. Refer to www.cospas-sarsat.org for registration information.

Refer to 14 CFR 91.207 for ELT inspection requirements. The C406-N must be inspected and tested by an approved technician using the correct test equipment under the appropriate civil aviation authorities approved conditions.

EMERGENCY PROCEDURES

If a forced landing is necessary, set the remote switch to the ON position before landing. This is very important in remote or mountainous terrain. The red warning light above the remote switch will flash and the aural warning will be heard.

After a landing when search and rescue aid is needed, use the ELT as follows:

NOTE

The ELT remote switch assembly could be inoperative if damaged during a forced landing. If inoperative, the inertia "G" switch will activate automatically. However, to turn the ELT OFF and ON again requires manual switching of the ELT panel switch which is located on the ELT unit.

1. MAKE SURE THE ELT IS ENERGIZED:
   a. If the red warning light above the remote switch is not flashing, set the remote switch to the ON position.
   b. Listen for the aural warning. If the COM radio(s) operate and can be energized safely (no threat of fire or explosion), energize a COM radio and set the frequency to 121.5 MHz. The ELT tone should be heard on the COM radio if the ELT is working correctly. When done, de-energize the COM radio(s) to conserve the airplane battery power.
   c. Make sure that nothing is touching or blocking the ELT antenna.
2. AFTER RESCUE - Set the remote switch to the ARM position to de-energize the ELT. If the remote switch does not function, set the switch on the C406-N (in the tailcone) to the OFF position.

NORMAL PROCEDURES

When operating in a remote area or over hazardous terrain, it is recommended that the ELT be inspected by an approved technician more frequently than required by 14 CFR 91.207.

NORMAL OPERATION

1. Check that the remote switch (on the right instrument panel) is set to the ARM position.

Normal operation of the C406-N from the flight crew station is only to de-energize and arm the ELT after it has been accidentally energized (no emergency).

The ELT can be energized by a lightning strike or hard landing. If the red light above the remote switch is flashing and the aural warning is heard, the ELT is energized. Check for the emergency signal on a COM radio set to 121.5 MHz. To stop the transmissions, set the remote switch to the ON position momentarily and then set to the ARM position. Tell the nearest Air Traffic Control facility about the accidental transmissions as soon as possible to hold search and rescue work to a minimum.

PERFORMANCE

There is no change to the airplane performance when the Artex C406-N ELT is installed.

Cessna
A Textron Company

Pilot's Operating Handbook and FAA Approved Airplane Flight Manual

CESSNA MODEL 172S

NAV III AVIONICS OPTION

Serials 172S9810 and On

SUPPLEMENT 7

BENDIX/KING KR87 AUTOMATIC DIRECTION FINDER (ADF)

SERIAL NO._____
REGISTRATION NO._____

This supplement must be inserted into Section 9 of the Pilot's Operating Handbook and FAA Approved Airplane Flight Manual when the Bendix/King KR 87 Automatic Direction Finder (ADF) is installed.

APPROVED BY

FAA APPROVED UNDER 14 CFR PART 21 SUBPART J
Cessna Aircraft Co.
Delegation Option Authorization DOA-230594-CE
Victoria E. Luff Administrative AS

Member of GAMA

DATE OF APPROVAL 22 DECEMBER 2005

22 DECEMBER 2005

COPYRIGHT © 2005
CESSNA AIRCRAFT COMPANY
WICHITA, KANSAS, USA

SUPPLEMENT 7

BENDIX/KING KR87 AUTOMATIC DIRECTION FINDER (ADF)

Use the Log of Effective Pages to determine the current status of this supplement.

Pages affected by the current revision are indicated by an asterisk (*) preceding the page number.

Supplement Status	**Date**
Original Issue	22 December 2005

LOG OF EFFECTIVE PAGES

Page Number	Page Status	Revision Number
S7-1 thru S7-12	Original	0

SERVICE BULLETIN CONFIGURATION LIST

The following is a list of Service Bulletins that are applicable to the operation of the airplane, and have been incorporated into this supplement. This list contains only those Service Bulletins that are currently active.

Number	Title	Airplane Serial Effectivity	Revision Incorporated	Incorporated in Airplane

BENDIX/KING KR87 AUTOMATIC DIRECTION FINDER (ADF)

GENERAL

The Bendix/King Digital ADF is a panel-mounted, digitally tuned automatic direction finder. It is designed to provide continuous 1-kHz digital tuning in the frequency range of 200-kHz to 1799-kHz and eliminates the need for mechanical band switching. The system has a receiver, a built-in electronic timer, a bearing pointer shown on the G1000 Horizontal Situation Indicator (HSI), and a KA-44B combined loop and sense antenna. Controls and displays for the Bendix/King Digital ADF are shown and described in Figure S7-1. The Garmin GMA 1347 Audio Panel is used to control audio output. Audio panel operation is described in the Garmin G1000 Cockpit Reference Guide.

The Bendix/King Digital ADF can be used for position plotting and homing procedures, and for aural reception of amplitude modulated (AM) signals.

The flip-flop frequency display allows switching between preselected standby and active frequencies by pushing the frequency transfer button. Both preselected frequencies are stored in a nonvolatile memory circuit (no battery power required) and displayed in large, easy-to-read, self-dimming gas discharge numbers. The active frequency is continuously displayed in the left window, while the right window will display either the standby frequency or the selected readout from the built-in electronic timer.

The built-in electronic timer has two timing functions that operate independently. An automatic flight timer starts when the unit is turned on. This timer counts up to 59 hours and 59 minutes. An elapsed timer will count up or down for up to 59 minutes and 59 seconds. When a preset time interval has been programmed and the countdown reaches:00, the display will flash for 15 seconds. Since both the flight timer and elapsed timer operate independently, it is possible to monitor either one without disrupting the other. The pushbutton controls are internally lighted. The light intensity is controlled by the AVIONICS dimmer control.

(Continued Next Page)

BENDIX/KING KR87 AUTOMATIC DIRECTION FINDER (ADF)

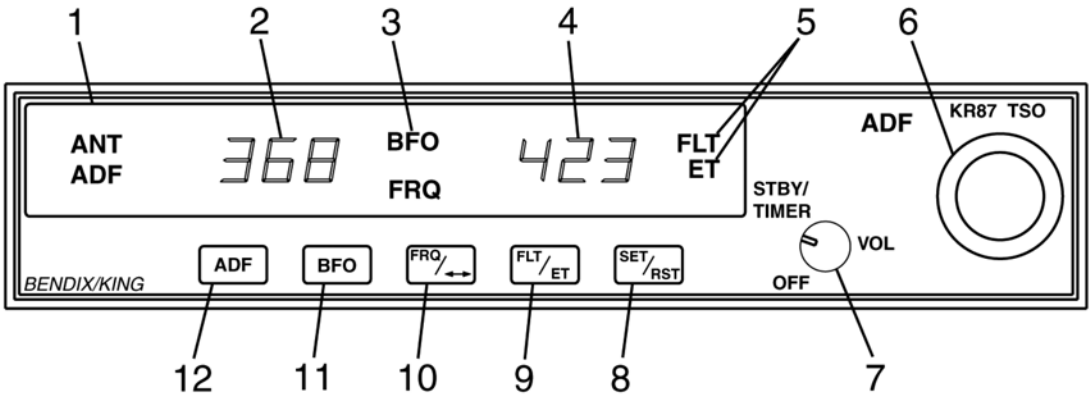

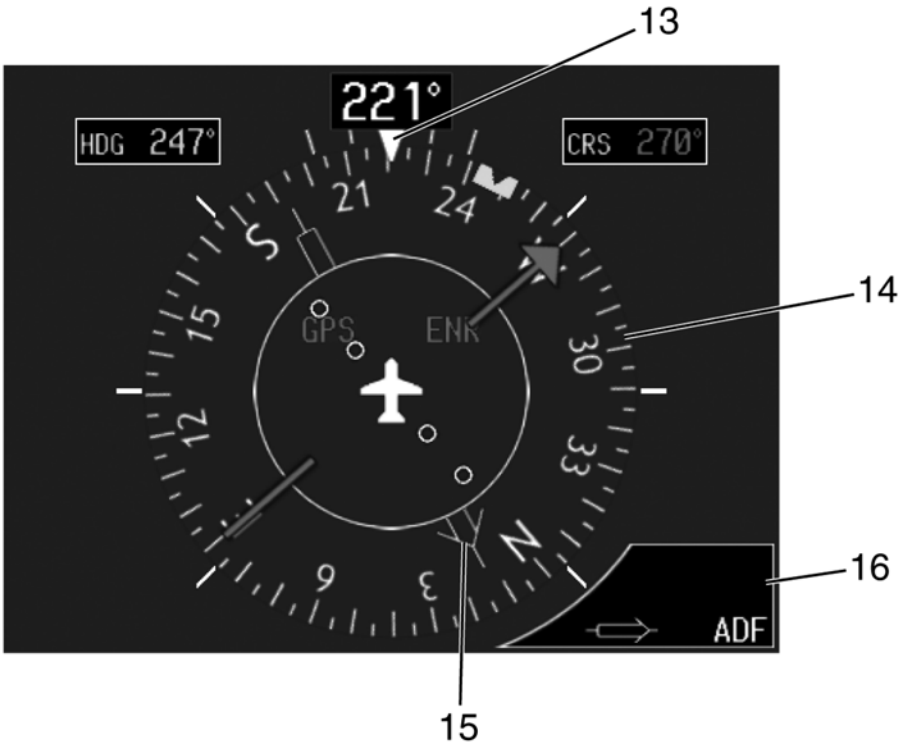

0585T1043
0585T1065

Figure S7-1

GENERAL (CONTINUED)

1. ANT/ADF MODE ANNUNCIATOR - Antenna (ANT) is selected when the ADF button is in the OUT position. This mode improves the audio reception and is usually used for station identification. The bearing pointer is deactivated and will park in the 90° relative position. Automatic Direction Finder (ADF) mode is selected by pushing the ADF button. This mode activates the bearing pointer and will point in the direction of the station relative to the aircraft heading.
2. ACTIVE FREQUENCY DISPLAY - The frequency to which the ADF is tuned is displayed here. The active ADF frequency can be changed directly when either of the timer functions is selected.
3. BFO (Beat Frequency Oscillator) ANNUNCIATOR - The BFO mode is activated and annunciated by pushing the BFO button. When BFO mode is active, the carrier wave and its morse code identifier can be heard.

NOTE

CW signals (Morse Code) are unmodulated and no audio will be heard without use of BFO. This type of signal is not used in the United States air navigation. It is used in some foreign countries and marine beacons.

4. STANDBY FREQUENCY/FLIGHT TIME OR ELAPSED TIME DISPLAY - When FRQ is shown, the STANDBY frequency is shown in the right display. The STANDBY frequency is selected using the frequency select knobs. The selected STANDBY frequency is put into the active frequency window by pushing the frequency transfer button. Either the standby frequency, the flight timer, or the elapsed time is shown in this position. The flight timer and elapsed timer replace the standby frequency which goes into blind memory to be called back at any time by pushing the FRQ button. Flight time or elapsed time are shown and annunciated by depressing the FLT/ET button.
5. FLIGHT TIMER AND ELAPSED TIMER MODE ANNUNCIATION - Either the elapsed time (ET) or flight time (FLT) mode is annunciated here.

(Continued Next Page)

GENERAL (CONTINUED)

6. FREQUENCY SELECT KNOBS - Selects the standby frequency when FRQ is displayed and directly selects the active frequency whenever either of the time functions is selected. The frequency selector knobs may be turned either clockwise or counterclockwise. The small knob is pulled out to tune the 1's. The small knob is pushed in to tune the 10's. The outer knob tunes the 100's with rollover into the 1000's up to 1799. These knobs are also used to set the desired time when the elapsed timer is used in the countdown mode.
7. ON/OFF/VOLUME CONTROL SWITCH (ON/OFF/VOL) - Controls power and audio output level. Turn the control switch clockwise from the OFF position to energize the receiver and increase audio volume. The KR87 has audio muting which causes the audio output to be muted unless the receiver is locked on a valid station.
8. SET/RESET ELAPSED TIMER BUTTON (SET/RST) - The SET/RST button resets the elapsed timer whether it is being displayed or not.
9. FLIGHT TIMER/ELAPSED TIMER MODE SELECTOR BUTTON (FLT/ET) -- The FLT/ET button selects either Flight Timer mode or Elapsed Timer mode when pushed.
10. FREQUENCY TRANSFER BUTTON (FRQ) - The FRQ transfer button interchanges the active and standby frequencies when pushed.
11. BFO (Beat Frequency Oscillator) BUTTON - The BFO button selects the BFO mode when pushed in. (See note under item 3).
12. ADF BUTTON - The ADF button selects either the ANT mode or the ADF mode. The ANT mode is selected when the ADF button is in the out position. The ADF mode is selected when the ADF button is pushed in.
13. LUBBER LINE - Indicates magnetic heading of the airplane.
14. ROTATING COMPASS ROSE (HSI COMPASS CARD) - The rotating compass rose turns as the heading of the airplane changes. The magnetic heading of the airplane is under the lubber line.
15. BEARING POINTER - Shows magnetic bearing to the station.
16. BEARING INFORMATION WINDOW - Shows the type of pointer that is being used as the ADF bearing pointer. If ADF is not shown, push the BRG1 or BRG2 softkey until ADF is shown.

OPERATING LIMITATIONS

Refer to Section 2 of the Pilot's Operating Handbook and FAA Approved Flight Manual (POH/AFM).

EMERGENCY PROCEDURES

There is no change to the airplane emergency procedures when the Bendix/King KR 87 Automatic Direction Finder (ADF) is installed.

NORMAL PROCEDURES

TO OPERATE AS AN AUTOMATIC DIRECTION FINDER:

1. OFF/VOL Control - ON
2. Frequency Selector Knobs - SELECT desired frequency in the standby frequency display.
3. FRQ Button - PUSH to move the desired frequency from the standby to the active position.
4. ADF Selector Switch (on audio control panel) - SELECT as desired.
5. OFF/VOL Control - SET to desired volume level and identify that desired station is being received.
6. PFD Softkey (on PFD) - PUSH to show BRG1 and BRG2 softkeys.
7. BRG1 or BRG2 Softkey (on PFD) - PUSH to show ADF in Bearing Information Window.
8. ADF Button - SELECT ADF mode and note magnetic bearing on HSI.

(Continued Next Page)

NORMAL PROCEDURES (CONTINUED)

ADF TEST (PREFLIGHT or IN FLIGHT):

1. ADF Button - SELECT ANT mode and note pointer moves to 90° position.
2. ADF Button - SELECT ADF mode and note the pointer moves without hesitation to the station bearing. Excessive pointer sluggishness, wavering or reversals indicate a signal that is too weak or a system malfunction.

TO OPERATE BFO:

1. OFF/VOL Control - ON
2. BFO Button - PRESS ON
3. ADF Selector Buttons (on audio control panel) - SET to desired mode.
4. VOL Control - ADJUST to desired listening level.

NOTE

A 1000-Hz tone and Morse Code identifier is heard in the audio output when a CW signal is received.

TO OPERATE FLIGHT TIMER:

1. OFF/VOL Control - ON
2. FLT/ET Mode Button - PRESS (once or twice) until FLT is annunciated. Timer will already be counting since it is activated by turning the unit on.
3. OFF/VOL Control - OFF and then ON if it is desired to reset the flight timer.

TO OPERATE AS A COMMUNICATIONS RECEIVER ONLY:

1. OFF/VOL Control - ON
2. ADF Button - SELECT ANT mode
3. Frequency Selector Knobs - SELECT desired frequency in the standby frequency display.
4. FRQ Button - PRESS to move the desired frequency from the standby to the active position.
5. ADF Selector Buttons (on audio control panel) - SET to desired mode.
6. VOL Control - ADJUST to desired listening level.

(Continued Next Page)

NORMAL PROCEDURES (CONTINUED)

TO OPERATE ELAPSED TIME TIMER-COUNT UP MODE:

1. OFF/VOL Control - ON
2. FLT/ET Mode Button - PRESS (once or twice) until ET is annunciated.
3. SET/RST Button - PRESS momentarily to reset elapsed timer to zero.

NOTE

The Standby Frequency which is in memory while Flight Time or Elapsed Time modes are being displayed may be called back by pushing the FRQ button, then transferred to active by pushing the FRQ button again.

TO OPERATE ELAPSED TIME TIMER COUNT DOWN MODE:

1. OFF/VOL Control - ON
2. FLT/ET Mode Button - PRESS (once or twice) until ET is annunciated.
3. SET/RST Button - PRESS until the ET annunciation begins to flash.
4. FREQUENCY SELECTOR KNOBS - SET desired time in the elapsed time display. The small knob is pulled out to tune the 1's. The small knob is pushed in to tune the 10's. The outer knob tunes minutes up to 59 minutes.

NOTE

Selector knobs remain in the time set mode for 15 seconds after the last entry or until the SET/RST, FLT/ET or FRQ button is pressed.

5. SET/RST Button - PRESS to start countdown. When the timer reaches 0, it will start to count up as display flashes for 15 seconds.

NOTE

While FLT or ET are displayed, the active frequency on the left side of the window may be changed, by using the frequency selector knobs, without any effect on the stored standby frequency or the other modes.

(Continued Next Page)

NORMAL PROCEDURES (CONTINUED)

ADF OPERATION NOTES:

ERRONEOUS ADF BEARING DUE TO RADIO FREQUENCY PHENOMENA:

In the U.S., the FCC, which assigns AM radio frequencies, occasionally will assign the same frequency to more than one station in an area. Certain conditions, such as Night Effect, may cause signals from such stations to overlap. This should be taken into consideration when using AM broadcast stations for navigation.

Sunspots and atmospheric phenomena may occasionally distort reception so that signals from two stations on the same frequency will overlap. For this reason, it is always wise to make positive identification of the station being tuned, by switching the function selector to ANT and listening for station call letters.

ELECTRICAL STORMS:

In the vicinity of electrical storms, an ADF indicator pointer tends to swing from the station tuned toward the center of the storm.

NIGHT EFFECT:

This is a disturbance particularly strong just after sunset and just after dawn. An ADF indicator pointer may swing erratically at these times. If possible, tune to the most powerful station at the lowest frequency. If this is not possible, take the average of pointer oscillations to determine station bearing.

MOUNTAIN EFFECT:

Radio waves reflecting from the surface of mountains may cause the pointer to fluctuate or show an erroneous bearing. This should be taken into account when taking bearings over mountainous terrain.

COASTAL REFRACTION:

Radio waves may be refracted when passing from land to sea or when moving parallel to the coastline. This also should be taken into account.

PERFORMANCE

There is no change in airplane performance when the Bendix/King KR 87 Automatic Direction Finder (ADF) is installed. However, the installation of an externally mounted antenna or related external antennas, will result in a minor reduction in cruise performance.

Cessna
A Textron Company

Pilot's Operating Handbook and
FAA Approved Airplane Flight Manual

CESSNA MODEL 172S

NAV III AVIONICS OPTION

Serials 172S9810 and On

SUPPLEMENT 8

RUSSIAN FEDERATION (RF) AND OTHER COMMONWEALTH OF INDEPENDENT STATES (CIS) COUNTRIES

SERIAL NO. _____

REGISTRATION NO. _____

This supplement must be inserted into Section 9 of the Pilot's Operating Handbook and FAA Approved Airplane Flight Manual when the airplane is operated within the territory of the Russian Federation (RF) and other Commonwealth of Independent States (CIS) Countries. This supplement is approved by the U.S. Federal Aviation Administration (FAA) on behalf of the Russian Aviation Register.

APPROVED BY

FAA APPROVED UNDER 14 CFR PART 21 SUBPART J
Cessna Aircraft Co.
Delegation Option Authorization DOA-230694-CE

DOA Administrator

Member of GAMA

DATE OF APPROVAL 04-04-06

4 APRIL 2006

COPYRIGHT © 2006
CESSNA AIRCRAFT COMPANY
WICHITA, KANSAS, USA

SUPPLEMENT 8

RUSSIAN FEDERATION (RF) AND OTHER COMMONWEALTH OF INDEPENDENT STATES (CIS) COUNTRIES

Use the Log of Effective Pages to determine the current status of this supplement.

Pages affected by the current revision are indicated by an asterisk (*) preceding the page number.

Supplement Status	**Date**
Original Issue	4 April 2006

LOG OF EFFECTIVE PAGES

Page Number	Page Status	Revision Number
S8-1 thru S8-21/S8-22	Original	0

Approved for RF and CIS Countries Only

SERVICE BULLETIN CONFIGURATION LIST

The following is a list of Service Bulletins that are applicable to the operation of the airplane, and have been incorporated into this supplement. This list contains only those Service Bulletins that are currently active.

Number	Title	Airplane Serial Effectivity	Revision Incorporated	Incorporated in Airplane

RUSSIAN FEDERATION (RF) AND OTHER COMMONWEALTH OF INDEPENDENT STATES (CIS) COUNTRIES

GENERAL

This supplement must be placed in Section 9 of the basic Pilot's Operating Handbook and FAA Approved Airplane Flight Manual, when the airplane is operated within the territory of the Russian Federation (RF) and other Commonwealth of Independent States (CIS) Countries. The information contained herein supplements the information of the basic Pilot's Operating Handbook and FAA Approved Airplane Flight Manual. Limitations, procedures, and performance found in this supplement supersedes those found in the basic Pilot's Operating Handbook and FAA Approved Airplane Flight Manual. For limitations, procedures, and performance information not contained in this supplement, consult the basic Pilot's Operating Handbook and FAA Approved Airplane Flight Manual.

NOTE

In RF and CIS countries, FAA operating rules (i.e., 14 CFR Part 91 and 14 CFR Part 135) are not applicable. The airplane must be equipped and operated in accordance with RF and CIS applicable operational requirements.

OPERATING LIMITATIONS

The following Limitations supersede and/or are in addition to the Limitations set forth in the basic Pilot's Operating Handbook and FAA Approved Airplane Flight Manual:

Maximum number of airplane occupants: 1 Pilot plus 3 Passengers

Maximum bank angle: 60°

Operation in heavy precipitation (rain or snow) is prohibited.

Flight into known significant convective activity and thunderstorms is prohibited.

Flight into known icing or freezing rain is prohibited.

Operations in RF and CIS airspace are approved only on routes covered by ATC ground facilities using RBS mode.

The Nav III Avionics Option is approved for Category I ILS approach operations only.

The Global Positioning Satellite (GPS) system is not approved for approach.

Operation over water beyond the Maximum Glide distance from shore is prohibited (Refer to the POH/AFM, Section 3, Figure 3-1).

Spins are prohibited at weight more than 2100 pounds.

Autopilot must be installed and operational for all operations within RF and CIS airspace.

Approved for RF and CIS Countries Only

KINDS OF OPERATION LIMITS

The following Kinds of Operations Equipment List (KOEL) identifies the equipment required to be operational for airplane airworthiness in the listed kind of operations for airplanes operating within the territory of the Russian Federation and other Commonwealth of Independent States countries.

The following KOEL supersedes the KOEL located in Section 2 of the POH/AFM.

KINDS OF OPERATIONS EQUIPMENT LIST

System, Instrument, Equipment and/or Function	KIND OF OPERATION				COMMENTS
	VFR DAY	VFR NIGHT	IFR DAY	IFR NIGHT	
PLACARDS AND MARKINGS					
172S Nav III POH/AFM	1	1	1	1	Accessible to pilot in flight
Garmin G1000™ Cockpit Reference Guide	1	1	1	1	Accessible to pilot in flight
AIR CONDITIONING					
1 - Forward Avionics Fan	1	1	1	1	
2 - PFD Fan	0	0	0	0	
3 - MFD Fan	0	0	0	0	
4 - Aft Avionics Fan	1	1	1	1	
AUTOFLIGHT					
1 - Bendix/King KAP 140 POH Supplement	1	1	1	1	Accessible to pilot in flight when using autopilot
2 - Bendix/King KAP 140 Autopilot	1	1	1	1	

(Continued Next Page)

Approved for RF and CIS Countries Only

KINDS OF OPERATIONS EQUIPMENT LIST (Continued)

System, Instrument, Equipment and/or Function	KIND OF OPERATION: VFR DAY	VFR NIGHT	IFR DAY	IFR NIGHT	COMMENTS
COMMUNICATIONS					
1 - VHF COM	1	1	1	1	
ELECTRICAL POWER					
1 - 24V Main Battery	1	1	1	1	
2 - 28V Alternator	1	1	1	1	
3 - 24V Standby Battery	1	1	1	1	* Refer to Note 1
4 - Main Ammeter	1	1	1	1	
5 - Standby Ammeter	1	1	1	1	* Refer to Note 1
EQUIPMENT AND FURNISHINGS					
1 - Seat Belt Assembly	1	1	1	1	Each Seat Occupant
2 - Shoulder Harness	1	1	1	1	Front Seat Occupants

NOTE

1. The European Aviation Safety Agency (EASA) requires the 24V Standby Battery and Standby Ammeter to successfully complete the pre-flight check before operating the airplane in VFR night, IFR day, or IFR night conditions in Europe. Correct operation of the 24V Standby Battery and Standby Ammeter is recommended for all other operations.

(Continued Next Page)

Approved for RF and CIS Countries Only

KINDS OF OPERATIONS EQUIPMENT LIST (Continued)

System, Instrument, Equipment and/or Function	KIND OF OPERATION				COMMENTS
	VFR DAY	VFR NIGHT	IFR DAY	IFR NIGHT	
FLIGHT CONTROLS					
1 - Flap Position Indicator	1	1	1	1	
2 - Flap Motor	1	1	1	1	
3 - Elevator Trim System	1	1	1	1	
4 - Elevator Trim Indicator	1	1	1	1	
FUEL SYSTEM					
1 - Electric Fuel Pump	1	1	1	1	
2 - Fuel Quantity Indicator - LH Tank	1	1	1	1	
3 - Fuel Quantity Indicator - RH Tank	1	1	1	1	
ICE AND RAIN PROTECTION					
1 - Alternate Static Air Source	0	1	1	1	
2 - Alternate Induction Air System	0	1	1	1	
INDICATING/RECORDING SYSTEM					
1 - Stall Warning System	1	1	1	1	
2 - System Annunciator and Warning Displays	1	1	1	1	
LANDING GEAR					
1 - Wheel Fairings	0	0	0	0	Removable

(Continued Next Page)

KINDS OF OPERATIONS EQUIPMENT LIST (Continued)

System, Instrument, Equipment and/or Function	KIND OF OPERATION: VFR DAY	VFR NIGHT	IFR DAY	IFR NIGHT	COMMENTS
LIGHTING					
1 - PFD Bezel Lighting	0	0	0	1	
2 - PFD Backlighting	*	1	1	1	*Refer to Note 2
3 - MFD Bezel Lighting	0	0	0	1	
4 - MFD Backlighting	*	1	1	1	*Refer to Note 3
5 - Switch and Circuit Breaker Panel Lighting	0	1	0	1	
6 - Airspeed Indicator (Standby) Internal Lighting	0	1	0	1	
7 - Altimeter (Standby) Internal Lighting	0	1	0	1	
8 - Non-stabilized Magnetic Compass Internal Lighting	0	1	0	1	
9 - Attitude Indicator (Vacuum) Internal Lighting	0	1	0	1	
10 - Cockpit Flood Light	0	1	0	1	
11 - Aircraft Position (NAV) Lights	0	1	1	1	

NOTE

2. PDF backlighting is required for day VFR flight if MFD backlighting has failed. Display backup mode must be active so engine indicators are shown.
3. MFD backlighting is required for day VFR flight if PDF backlighting has failed. Display backup mode must be active so flight instruments are shown.

(Continued Next Page)

Approved for RF and CIS Countries Only

KINDS OF OPERATIONS EQUIPMENT LIST (Continued)

System, Instrument, Equipment and/or Function	KIND OF OPERATION				COMMENTS
	VFR DAY	VFR NIGHT	IFR DAY	IFR NIGHT	
LIGHTING (Continued)					
12 - STROBE Light System	1	1	1	1	
13 - BEACON Light	0	0	0	0	
14 - TAXI Light	0	0	0	0	
15 - LAND (Landing) Light	0	1	0	1	Operations for hire only
NAVIGATION AND PITOT-STATIC SYSTEM					
1 - G1000 Airspeed Indicator	1	1	1	1	
2 - Standby Airspeed Indicator	1	1	1	1	
3 - G1000 Altimeter	1	1	1	1	
4 - Standby Altimeter	1	1	1	1	
5 - G1000 Vertical Speed Indicator	1	1	1	1	
6 - G1000 Attitude Indicator	1	1	1	1	
7 - Attitude Indicator - Vacuum (Standby)	1	1	1	1	
8 - G1000 Directional Indicator (HSI)	1	1	1	1	
9 - G1000 Turn Coordinator	1	1	1	1	
10 - Non-stabilized Magnetic Compass	1	1	1	1	
11 - VHF Navigation Radio (VOR/LOC/GS)	A/R	A/R	A/R	A/R	As Required Per Procedure

(Continued Next Page)

Approved for RF and CIS Countries Only

KINDS OF OPERATIONS EQUIPMENT LIST (Continued)

System, Instrument, Equipment and/or Function	KIND OF OPERATION: VFR DAY	VFR NIGHT	IFR DAY	IFR NIGHT	COMMENTS
NAVIGATION AND PITOT-STATIC SYSTEM (Continued)					
12 - GPS Receiver/Navigator	A/R	A/R	A/R	A/R	As Required Per Procedure
13 - ADF Navigation Radio	A/R	A/R	A/R	A/R	As Required Per Procedure
14 - Marker Beacon Receiver	A/R	A/R	A/R	A/R	As Required Per Procedure
15 - Blind Altitude Encoder	A/R	1	1	1	As Required Per Procedure
16 - Clock	1	1	1	1	
VACUUM					
1 - Engine-driven Vacuum Pump	1	1	1	1	
2 - Vacuum Indicator	1	1	1	1	
ENGINE FUEL AND CONTROL					
1 - Fuel Flow Indicator	1	1	1	1	
ENGINE INDICATING					
1 - Tachometer (RPM)	1	1	1	1	
2 - Cylinder Head Temperature (CHT) Indicator	0	0	0	0	
3 - Oil Pressure Indicator	1	1	1	1	
4 - Oil Temperature Indicator	1	1	1	1	
ENGINE OIL					
1 - Engine Crankcase Dipstick	1	1	1	1	

Approved for RF and CIS Countries Only

FUEL LIMIATIONS

Approved Fuels:100LL (ASTM-D910)
100 (Formerly 100/130) (ASTM-D910)
B91/115 (GOST 1012-72)

See the latest revision of Lycoming Service Instruction No.1070 for approved fuel grades.

Fuels must contain an anti-icing fuel additive (Isopropyl Alcohol or DiEGME) in concentrations mixed as noted in Section 8 of the POH/ AFM.

MAXIMUM OPERATING ALTITUDE LIMIT

MAXIMUM APPROVED OPERATING ALTITUDE: 3000 meters (9800 Feet).

If oxygen is provided for each occupant, the airplane can be operated up to the maximum altitude for the oxygen system, or 4200 meters (13,779 feet), whichever altitude is lower.

OUTSIDE AIR TEMPERATURE LIMITS

Ground operations limits for a cold day:. . . . . .Minus 40°C

Ground operations limits for a hot day: . . . . . 40°C

TAXI OPERATIONAL LIMITS

Uncontaminated paved taxiway:
• Maximum wind velocity while taxiing: . . . . . 14 m/s (27 Knots)

Paved taxiway contaminated with precipitation:
• Maximum wind velocity while taxiing: . . . . . 3 m/s (5 Knots)

Refer to Section 4 of the POH/AFM for additional information on taxiing.

TAKEOFF AND LANDING OPERATIONAL LIMITS

Maximum Takeoff and Landing Altitude: . . . . 2438 meters (8000 Feet)

Maximum Headwind Velocity: . . . . . 14 m/s (27 Knots)

Maximum Tailwind Velocity: . . . . . 5 m/s (10 Knots)

Maximum crosswind velocity on
uncontaminated paved runway: . . . . . .7m/s (15 Knots)

ALLOWABLE RUNWAY SURFACE CONDITIONS

1. Uncontaminated runway with paved surface.
2. Paved runway contaminated with precipitation (average depth and types):
   a. Water, less that 10.0 mm.
   b. Slush, less than 10.0 mm.
   c. Loose snow less than 30.0 mm.
3. Unpaved runway
   a. Surface hardness must be greater than 7 kg/cm^2.

NOTE

Landing on contaminated unpaved runways is prohibited.

Operating with the landing gear fairings removed is recommended on wet or unpaved runways when temperatures are near or below freezing.

MAXIMUM CROSSWIND ON CONTAMINATED RUNWAYS

Contaminated paved runways with:
- Water, less than 10.0 mm . . . . . 3 m/s (5 Knots)
- Slush, less than 10.0 mm . . . . . 3 m/s (5 Knots)
- Loose snow, less than 30.0 mm . . . . . 3 m/s (5 Knots)

Paved runway with less than 3 mm of water, snow or slush and braking coefficient of friction(μ) of:
- μ=0.3 (poor braking) . . . . . 3 m/s (5 Knots)
- μ=0.4 (average braking) . . . . . 5 m/s (9 Knots)
- μ=0.5 (good braking, dry or equivalent to dry runway) . . . . . 7 m/s (15 Knots)

REQUIRED PLACARDS AND MARKINGS

Above exit doors, in clear view of each occupant:

EMERGENCY PROCEDURES

The following pages from Section 3 of the POH/AFM have instructions for operations in RF and CIS countries. These pages replace the procedures found in Section 3 of the POH/AFM for those operations:

(Continued Next Page)

Approved for RF and CIS Countries Only

EMERGENCY PROCEDURES (Continued)

FORCED LANDINGS

EMERGENCY LANDING WITHOUT ENGINE POWER

1. Passenger Seats - MOST UPRIGHT POSITION
2. Seats and Seat Belts - SECURE
3. Airspeed - 70 KIAS Flaps UP
   65 KIAS Flaps 10° - FULL
4. Mixture Control - IDLE CUT OFF
5. FUEL SHUTOFF Valve - OFF (pull full out)
6. MAGNETOS Switch - OFF
7. Wing Flaps - AS REQUIRED (FULL recommended)
8. STBY BATT Switch - OFF
9. MASTER Switch (ALT and BAT) - OFF (when landing is assured)
10. Doors - UNLATCH PRIOR TO TOUCHDOWN
11. Touchdown - SLIGHTLY TAIL LOW
12. Brakes - APPLY HEAVILY
13. Emergency Radio - Operate (P-855A1) Russian made Emergency Radio according to attached instructions.

PRECAUTIONARY LANDING WITH ENGINE POWER

1. Passenger Seats - MOST UPRIGHT POSITION
2. Seats and Seat Belts - SECURE
3. Airspeed - 65 KIAS
4. Wing Flaps - 20°
5. Selected Field - FLY OVER, noting terrain and obstructions.
6. Wing Flaps - FULL (on final approach)
7. Airspeed - 65 KIAS
8. STBY BATT Switch - OFF
9. MASTER Switch (ALT and BAT) - OFF
10. Doors - UNLATCH PRIOR TO TOUCHDOWN
11. Touchdown - SLIGHTLY TAIL LOW
12. Mixture Control - IDLE CUT OFF
13. MAGNETOS Switch - OFF
14. Brakes - APPLY HEAVILY
15. Emergency Radio - Operate (P-855A1) Russian made Emergency Radio according to attached instructions.

(Continued Next Page)

EMERGENCY PROCEDURES (Continued)

DITCHING

1. Radio - TRANSMIT MAYDAY on 121.5 MHz, giving location and intentions and SQUAWK 7700.
2. Heavy Objects (in baggage area) - SECURE OR JETTISON (if possible)
3. Passenger Seats - MOST UPRIGHT POSITION
4. Seats and Seat Belts - SECURE
5. Wing Flaps - 20° to FULL
6. Power - ESTABLISH 300 FT/MIN DESCENT AT 55 KIAS

NOTE

If no power is available, approach at 65 KIAS with Flaps UP or 60 KIAS with Flaps 10°.

7. Approach - High Winds, Heavy Seas - INTO THE WIND
   Light Winds, Heavy Swells - PARALLEL TO SWELLS
8. Cabin Doors - UNLATCH
9. Touchdown - LEVEL ATTITUDE AT ESTABLISHED RATE-OF-DESCENT.
10. Face - CUSHION at touchdown with folded coat.
11. ELT - ACTIVATE
12. Airplane - EVACUATE through cabin doors. If necessary, open window and flood cabin to equalize pressure so doors can be opened.
13. Life Vests and Raft - INFLATE WHEN CLEAR OF AIRPLANE.
14. Emergency Radio - Operate (P-855A1) Russian made Emergency Radio according to attached instructions.

(Continued Next Page)

EMERGENCY PROCEDURES (Continued)

FORCED LANDINGS

If all attempts to restart the engine fail and a forced landing is imminent, select a suitable field and prepare for the landing as discussed under the Emergency Landing Without Engine Power checklist. Transmit Mayday message on 121.5 MHz giving location and intentions and squawk 7700.

Before attempting an "off-airport" landing with engine power available, one should fly over the landing area at a safe, but low altitude, to inspect the terrain for obstructions and surface conditions, proceeding as discussed in the Precautionary Landing With Engine Power checklist.

Prepare for ditching by securing or jettisoning heavy objects located in the baggage area and collect folded coats for protection of occupants' face at touchdown. Transmit Mayday messages on 121.5 MHz giving location and intentions and squawk 7700. Avoid a landing flare because of the difficulty in judging height over a water surface. The checklist assumes the availability of power to make a precautionary water landing. If power is not available, use of the airspeeds noted with minimum flap extension will provide a more favorable attitude for a power off ditching.

In a forced landing situation, do not turn off the AVIONICS switch or MASTER switch until a landing is assured. Premature deactivation of the switches will disable all airplane electrical systems.

Following evacuation from the airplane, operate (P-885A1) Russian made Emergency Radio according to the attached instructions provided with the radio.

NORMAL PROCEDURES

NOTE

- In a left slip maneuver, the airspeed indicator may show a maximum of 20 knots below the actual airspeed. In a right slip maneuver, the airspeed indicator may show a maximum of 5 knots above the actual airspeed. This is because of the single static pressure port on the 172S left forward fuselage.
- At airspeeds greater than 120 KIAS, close the throttle if necessary to keep engine speed below 2700 RPM.

In the event of GPS failure when operating along routes that are ± 5 km wide without VOR/DME facilities and no NDB coverage, airplane position between the width of such routes can only be assured up to approximately 140 km from the last known position.

The pilot is to disregard Supplement 1 of the POH/AFM describing the pointer Model 3000-11 or 4000-11 Emergency Locator Transmitter (ELT).

COLD WEATHER OPERATIONS

NOTE

- The Garmin GDU 1040 PFD/MFD requires a warm-up time of up to 30 minutes when exposed to Minus 40°C for an extended period. A warm-up time of up to 15 minutes may be required when exposed to Minus 30°C for an extended period of time.
- During operation at outside temperatures below ISA Standard, the engine may develop greater than rated power at normal rated RPM, particularly at lower altitudes.

COLD SOAK

If extended exposure to cold weather is expected, refer to Maintenance Manual procedures to prepare the airplane for cold soak. If the airplane has cold soaked for more than two hours at temperatures colder than Minus 10°C, refer to Maintenance Manual procedures to prepare the airplane for flight. Cold temperatures will affect control cable tension. See Chapter 27 of the Maintenance Manual for flight control cable tensions. See Chapter 12 of the Maintenance Manual for information on lubrication and greasing of moving parts. See Section 8 of the POH/AFM for correct engine oil viscosity. See paragraphs on Cold Weather Operation in Section 4 of the POH/AFM for additional information on procedures for operating the airplane in cold temperatures.

When the outside temperature is less than Minus 34ºC, the airplane batteries should be removed and stored in the warm conditions.

The engine must be preheated before starting if engine temperature is less than Minus 6°C.

When the outside temperature is less than 0°C, moisture from combustion can freeze on the engine spark plugs if the engine does not continue to operate after it is started. This will prevent the engine from starting again. Preheat the engine to more than 0°C before starting the engine again.

Preheat the engine by directing warm air into the engine cooling inlets behind the propeller. The temperature of the preheating air should not be more than 120°C to prevent damage to the exterior paint. Open flames are prohibited near the airplane.

Before takeoff, preheat the airplane cabin to more than Minus 30°C for correct operation of the standby altimeter. If there is no warning that an instrument is operating incorrectly, all other instruments will operate down to the minimum temperature of the airplane.

Before operating the airplane, it is recommended to heat the cabin to a comfortable temperature for the cabin occupants.

PERFORMANCE

OPERATION ON CONTAMINATED RUNWAY

The takeoff distance on a paved runway with no more than 3 mm of precipitation is equal to dry runway takeoff distance.

The takeoff distance on a paved runway with precipitation greater than 3 mm is 20% greater than the dry runway takeoff distance.

To determine the required landing distance on a contaminated paved runway, the dry runway landing distance shall be multiplied by the following K factors:

Conditions	Basic Airfield	Alternate Airfield
$\mu \geq 0.5$ (good braking and runway with no standing water)	K = 1.67	K = 1.43
$0.5 \geq \mu \geq 0.4$ (Average Braking)	K = 1.72	K = 1.72
More than 3 mm precipitation or $0.4 \geq \mu \geq 0.3$ (Poor Braking)	K = 2.00	K = 2.00

For unpaved runway landing distance, refer to figure 5-12 in the POH/ AFM for the correction applied to grass runway landing distance.

LANDING DISTANCE CORRECTION FACTORS FOR CONTAMINATED PAVED RUNWAYS

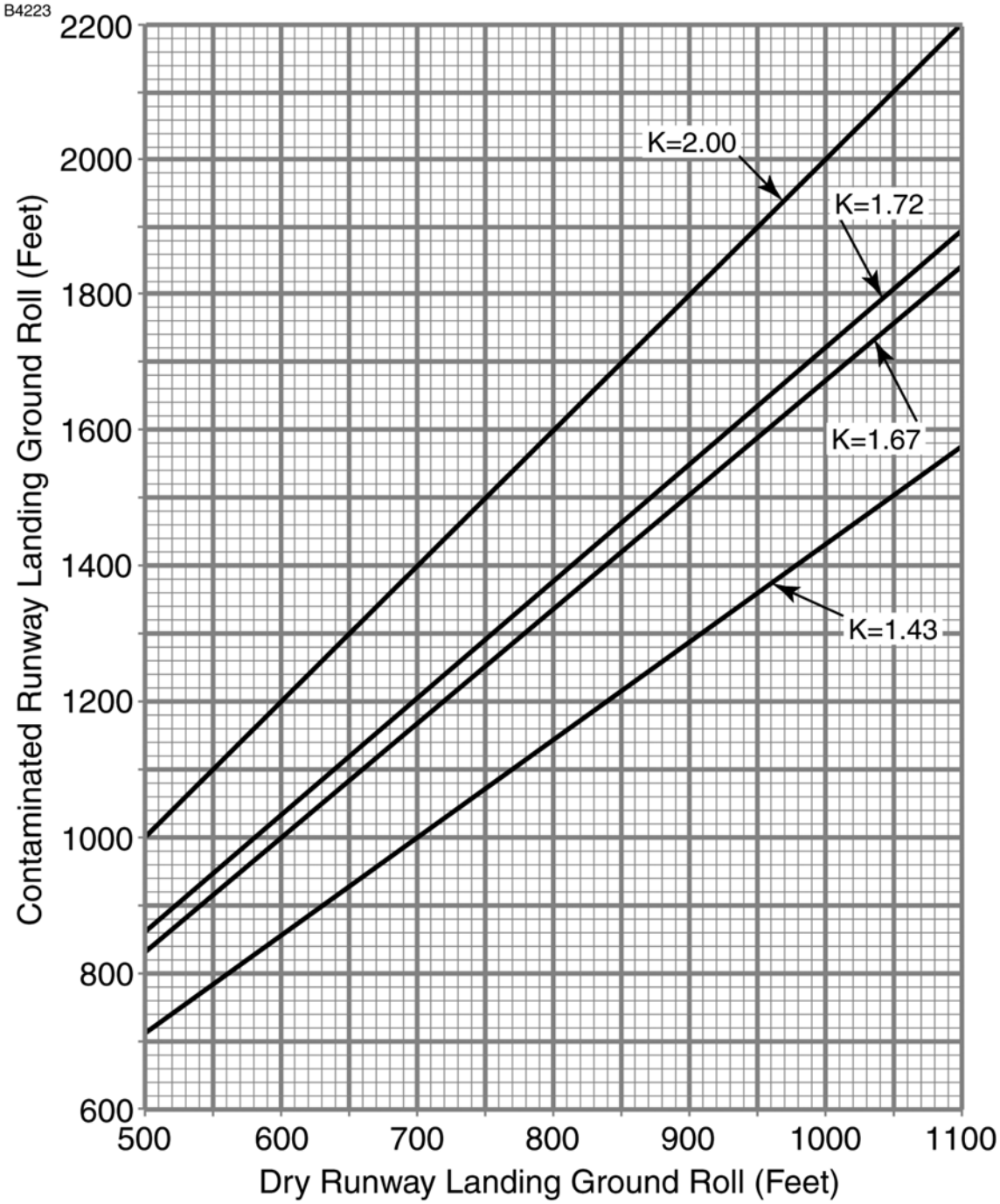

Figure S8-1

Approved for RF and CIS Countries Only

Cessna
A Textron Company

Pilot's Operating Handbook And FAA Approved Airplane Flight Manual

SKYHAWK SP

CESSNA MODEL 172S

NAV III AVIONICS OPTION
Serials 172S9810 and On

SUPPLEMENT 9

ARTEX ME406
EMERGENCY LOCATOR TRANSMITTER (ELT)

SERIAL NO._____
REGISTRATION NO._____

This supplement must be inserted into Section 9 of the Pilot's Operating Handbook and FAA Approved Airplane Flight Manual when the Artex ME406 Emergency Locator Transmitter (ELT) is installed.

APPROVED BY

FAA APPROVED UNDER 14 CFR PART 21 SUBPART J
Cessna Aircraft Co.
Delegation Option Authorization DOA-230594-CE

RLS Administrative AR

Member of GAMA

DATE OF APPROVAL 30 October 2006

30 OCTOBER 2006

COPYRIGHT © 2006
CESSNA AIRCRAFT COMPANY
WICHITA, KANSAS, USA

SUPPLEMENT 9

ARTEX ME406 EMERGENCY LOCATOR TRANSMITTER (ELT)

Use the Log of Effective Pages to determine the current status of this supplement.

Pages affected by the current revision are indicated by an asterisk (*) preceding the page number.

Supplement Status	Date
Original Issue	30 October 2006

LOG OF EFFECTIVE PAGES

Page Number	Page Status	Revision Number
S9-1 thru S9-8	Original	0

SERVICE BULLETIN CONFIGURATION LIST

The following is a list of Service Bulletins that are applicable to the operation of the airplane, and have been incorporated into this supplement. This list contains only those Service Bulletins that are currently active.

Number	Title	Airplane Serial Effectivity	Revision Incorporated	Incorporated in Airplane

ARTEX ME406 EMERGENCY LOCATOR TRANSMITTER (ELT)

GENERAL

The Artex ME406 Emergency Locator Transmitter (ELT) installation uses a solid-state 2-frequency transmitter powered by an internal lithium battery. The ME406 is also equipped with an instrument panel-mounted remote switch assembly, that includes a red warning light, and an external antenna mounted on the top of the tailcone. The remote switch assembly is installed along the upper right instrument panel and controls ELT operating modes from the flight crew station. When the remote switch is set to the ARM position, the transmitter is energized only when the internal "G" switch senses longitudinal inertia forces per TSO-C91a/TSO-C126. When the remote switch is set to the ON position, the transmitter is immediately energized.

The ME406 transmitter unit is located in the tailcone along the right side behind the baggage compartment aft panel. On the ELT transmitter unit is a panel containing an ARM/ON switch and a transmitter warning light.

The ELT installation uses two different warnings to tell the pilot when the ELT is energized. The aural warning is an unusual sound that is easily heard by the pilot. The visual warning is a flashing red light directly above the remote switch that shows the pilot that the ELT has been activated.

When the ME406 is energized, the ELT transmits the standard swept tone signal on the international VHF frequency of 121.5 MHz until battery power is gone. The 121.5 MHz signal is mainly used to pinpoint the beacon during search and rescue operations, and is monitored by general aviation, commercial aircraft, and government agencies.

In addition, for the first 24 hours of the ELT being energized, a 406.028 MHz signal is transmitted at 50 second intervals. This transmission lasts 440 milliseconds and contains identification data programmed into the ELT and is received by COSPAS/SARSAT satellites. The transmitted data may include the Aircraft ID, ELT Serial Number, Country Code, and COSPAS/SARSAT ID.

(Continued Next Page)

ARTEX ME406 ELT CONTROL PANEL

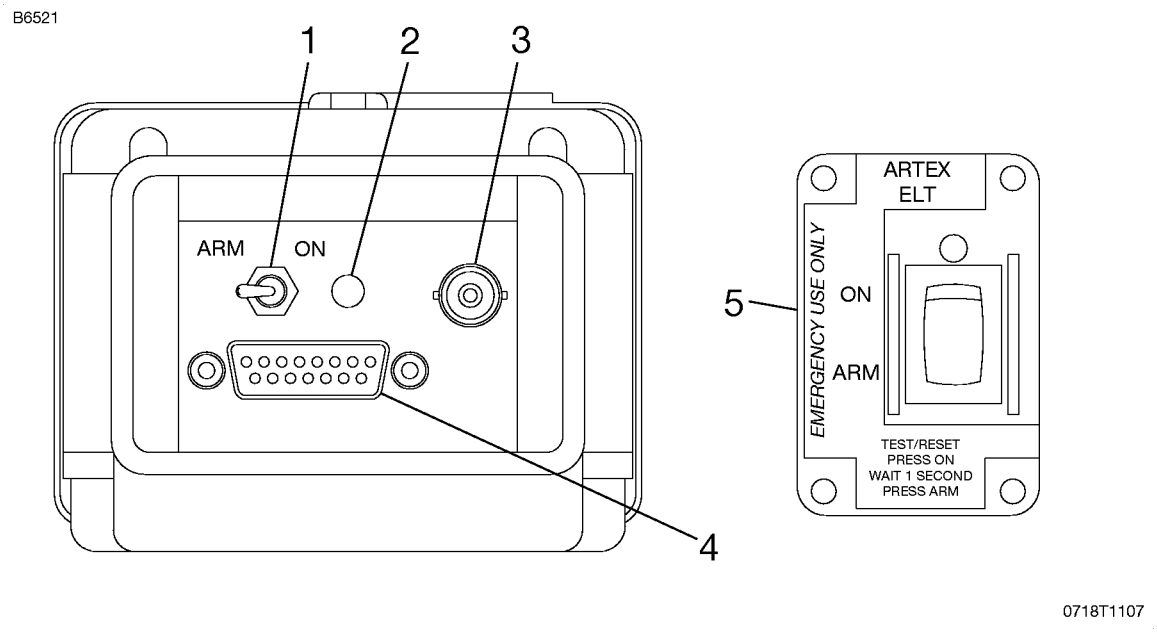

1. ELT PANEL SWITCH (2-Position Toggle Switch):
   a. ARM (OFF) - Turns OFF and ARMS transmitter for automatic activation if “G” switch senses a predetermined deceleration level.
   b. ON - Activates transmitter instantly. The ON position bypasses the automatic activation switch. The RED warning light on ELT panel and on the remote switch assembly mounted on the instrument panel should come on.
2. TRANSMITTER WARNING LIGHT - Light comes on RED to indicate the transmitter is transmitting a distress signal.
3. ANTENNA RECEPTACLE - Connects to the antenna mounted on top of tailcone.
4. REMOTE CABLE JACK - Connects to the ELT remote switch assembly located on the upper right instrument panel.
5. REMOTE SWITCH ASSEMBLY - (2-Position Rocker Switch):
   a. ARM (OFF) - Turns OFF and ARMS transmitter for automatic activation if “G” switch senses a predetermined deceleration level.
   b. ON - Remotely activates the transmitter for test or emergency situations. The RED warning light above the rocker switch comes on to indicate that the transmitter is transmitting a distress signal.

Figure S9-1

OPERATING LIMITATIONS

There are no additional airplane operating limitations when the Artex ME406 ELT is installed.

The airplane owner or operator must register the ME406 ELT with the applicable civil aviation authority before use to make sure that the identification code transmitted by the ELT is in the COSPAS/SARSAT database. Refer to www.cospas-sarsat.org for registration information.

Refer to 14 CFR 91.207 for ELT inspection requirements. The ME406 must be inspected and tested by an approved technician using the correct test equipment under the appropriate civil aviation authorities approved conditions.

EMERGENCY PROCEDURES

If a forced landing is necessary, set the remote switch to the ON position before landing. This is very important in remote or mountainous terrain. The red warning light above the remote switch will flash and the aural warning will be heard.

After a landing when search and rescue aid is needed, use the ELT as follows:

NOTE

The ELT remote switch assembly could be inoperative if damaged during a forced landing. If inoperative, the inertia "G" switch will activate automatically. However, to turn the ELT OFF and ON again requires manual switching of the ELT panel switch which is located on the ELT unit.

1. MAKE SURE THE ELT IS ENERGIZED:
   a. If the red warning light above the remote switch is not flashing, set the remote switch to the ON position.
   b. Listen for the aural warning. If the COM radio(s) operate and can be energized safely (no threat of fire or explosion), energize a COM radio and set the frequency to 121.5 MHz. The ELT tone should be heard on the COM radio if the ELT is working correctly. When done, de-energize the COM radio(s) to conserve the airplane battery power.
   c. Make sure that nothing is touching or blocking the ELT antenna.
2. AFTER RESCUE - Set the remote switch to the ARM position to de-energize the ELT. If the remote switch does not function, set the switch on the ME406 (in the tailcone) to the ARM position.

NORMAL PROCEDURES

When operating in a remote area or over hazardous terrain, it is recommended that the ELT be inspected by an approved technician more frequently than required by 14 CFR 91.207.

NORMAL OPERATION

1. Check that the remote switch (on the upper right instrument panel) is set to the ARM position.

Normal operation of the ME406 from the flight crew station is only to de-energize and arm the ELT after it has been accidentally energized (no emergency).

The ELT can be energized by a lightning strike or hard landing. If the red light above the remote switch is flashing and the aural warning is heard, the ELT is energized. Check for the emergency signal on a COM radio set to 121.5 MHz. To stop the transmissions, set the remote switch to the ON position momentarily and then set to the ARM position. Tell the nearest Air Traffic Control facility about the accidental transmissions as soon as possible to hold search and rescue work to a minimum.

PERFORMANCE

There is no change to the airplane performance when the Artex ME406 ELT is installed.

Cessna
A Textron Company

Pilot's Operating Handbook And FAA Approved Airplane Flight Manual

SKYHAWK SP

CESSNA MODEL 172S

NAV III AVIONICS OPTION

Serials 172S9810 and On

SUPPLEMENT 10

JAR-OPS OPERATIONAL ELIGIBILITY

SERIAL NO._____
REGISTRATION NO._____

This supplement must be inserted into Section 9 of the Pilot's Operating Handbook and FAA Approved Airplane Flight Manual for JAR-OPS Operational Eligibility.

APPROVED BY

FAA APPROVED UNDER 14 CFR PART 21 SUBPART J
Cessna Aircraft Co.
Delegation Option Authorization DOA-230594-CE
Administrative AR
RLS

Member of GAMA

DATE OF APPROVAL 16 November 2006

16 NOVEMBER 2006

COPYRIGHT © 2006
CESSNA AIRCRAFT COMPANY
WICHITA, KANSAS, USA

SUPPLEMENT 10

JAR-OPS OPERATIONAL ELIGIBILITY

Use the Log of Effective Pages to determine the current status of this supplement.

Pages affected by the current revision are indicated by an asterisk (*) preceding the page number.

Supplement Status	**Date**
Original Issue	16 November 2006

LOG OF EFFECTIVE PAGES

Page Number	Page Status	Revision Number
S10-1 thru S10-5/S10-6	Original	0

SERVICE BULLETIN CONFIGURATION LIST

The following is a list of Service Bulletins that are applicable to the operation of the airplane, and have been incorporated into this supplement. This list contains only those Service Bulletins that are currently active.

Number	Title	Airplane Serial Effectivity	Revision Incorporated	Incorporated in Airplane

JAR-OPS OPERATIONAL ELIGIBILITY

GENERAL

OPERATIONAL ELIGIBILITY

The JAA TGLs noted below specify that Operational Eligibility information be included in the airplane POH/AFM or POH/AFM Supplement for convenience in the JAR-OPS approval process. This Supplement provides a consistent location for the requested information. This information does not address the operation of the airplane or equipment by the pilot.

NAVIGATION OPERATIONAL ELIGIBILITY

The GPS/GNSS receivers in the G1000 System are certified to TSO C129a Class A1 and ETSO C129a Class A1 or TSO C145a and ETSO 2C145a.

The installed performance of the G1000 System has been tested and approved for IFR enroute, terminal and non-precision (RNAV or GPS) approach operations per AC 20-138A when using GPS/GNSS with the correct navigation database.

The G1000 System meets the requirements for GPS/GNSS as a Primary Means of Navigation for Oceanic/Remote Operations (RNP-10) per AC 20-138A, FAA Notice N8110.60, FAA Order 8400-12A and FAA Order 8700-1. Both GPS/GNSS receivers are required to be operating and receiving usable signals except for routes requiring only one Long Range Navigation sensor.

The G1000 System has been shown to be eligible for BRNAV (RNP-5) and PRNAV (RNP-1) Enroute and Terminal navigation per JAA TGL-2 (ACJ20X4), JAA TGL-10 and AC 90-96A provided that the G1000 is receiving usable navigation information from at least one GPS receiver. Eligibility does not constitute Operational Approval.

(Continued Next Page)

GENERAL (Continued)

SSR MODE S ENHANCED SURVEILLANCE OPERATIONAL ELIGIBILITY

The GTX 33 Transponder is certified to TSO C112a and ETSO 2C112a. The installed performance of the GTX 33 has been tested and approved per AC 20-131A, Draft AC-131B and AC 23-8B.

The GTX 33 is able to respond to interrogations in Modes A, C and is fully compliant with the requirements of Mode S Elementary Surveillance per TGL 13 Rev 1 and Draft TGL 13 Rev 2. Extended Squitter functionality is supported by the GTX 33. This does not constitute airworthiness or operational approval for Extended Squitter functionality.

OPERATING LIMITATIONS

There is no change to the airplane operating limitations for JAR-OPS Operational Eligibility. JAR-OPS may require separate airspace operating limitations.

EMERGENCY PROCEDURES

There is no change to the airplane emergency procedures for JAR-OPS Operational Eligibility.

NORMAL PROCEDURES

There is no change to the airplane normal procedures for JAR-OPS Operational Eligibility.

PERFORMANCE

There is no change to the airplane performance for JAR-OPS Operational Eligibility.